405 Pine St EVSE Service

RFP #069-26
5/01/26

Paul Charbonneau
Director of Purchasing & Facilities
Burlington Electric Department
585 Pine St
Burlington VT 05401
Ph: 802-809-1107
Email: pcharbonneau@burlingtonelectric.com

I. Request for Proposal

The City of Burlington Electric Department invites proposals for the installation of underground conduit at 405 Pine St for BED owned EV chargers.

II. Project Location

405 Pine Street
Burlington, VT 05401

III. Detailed Requirements

A. General

Bids for this project will be accepted for the following construction techniques:

1. Directional boring / conduit moling.
2. Traditional excavation and conduit placement where directional boring cannot be performed.

This is a firm-fixed price (FFP) contract. This means the contract provides for a price that is not subject to any adjustment on the basis of the contractor's cost experience in performing the contract. Contract price is the price bid, with no incentives or fees added. The total payment to the Contractor for this project will be calculated based on all satisfactorily completed work. The Unit Pricing Work Sheets you submitted will also be used when making changes to the Project as detailed on page 4 of this document. The addition, deletion or any modification to the proposed Project Unit Pricing Work Sheets must be approved in writing by BED prior to any work or services being performed.

As this RFP will be awarded on a firm-fixed price (FFP) contract basis, this implies that excavation fees are strictly between the City of Burlington Department of Public Works (DPW) and the Contractor. Thus, contractor is responsible for paying the actual DPW administrative and excavation fees. Each Contractor is responsible for taking out the permits. Contractor is responsible for paying the permit fees.

Any addition or subtraction amounts to the project from this point forward will have to be done in the form of change orders that would need to be agreed upon by both parties in writing before the affected work begins. Any changes that deviate out in the field from the technical specifications, drawings or purchase order require prior approval by Burlington Electric Department in the form of a Change Order to the original purchase order agreement. If the Change Order is not secured by the Contractor before the work begins, then Burlington Electric Department is not responsible for any of the material or work performed by said contractor. If said unauthorized work would have resulted in a credit for Burlington Electric Department, then the Unit Pricing Work Sheets provided in the RFP will be used to determine the credits used for deduct. If the work that was done would have resulted in an extra cost to Burlington Electric Department, the contractor will not be receiving any payment for goods or services due to this non compliance of unauthorized work.

For technical questions concerning this bid package contact Paul Charbonneau PCharbonneau@burlingtonelectric.com and he will forward the email to the Engineering Department.

The Contractor is responsible for the installation of the conduit system and concrete meter pedestal base shown on BED's Project drawing # D15080100. This includes but is not limited to the following:

1) Excavate and backfill trench under the street, sidewalk and grass. Work includes excavation and disposal of concrete sidewalk, asphalt sidewalk and asphalt street. It also includes concrete encasement of all conduits installed under the street and installing plastic warning tape above the conduits during backfilling.

2) Contractor shall utilize directional boring as their means of installation of conduit as much as possible to avoid disturbance of contaminated soils.

3) Provide and install all conduits, conduit sweeps, spacers, pull rope, anchors, etc. This item includes connecting new conduits with existing capped conduits, installing a 500 lb. rated, 1/4" nylon or polypropylene pull rope in each conduit. BED conduit sweeps shall be schedule 40, PVC, 36" radius, unless otherwise indicated on BED's project drawing.

4) Excavate, place and backfill any CDR boxes per the project specifications. BED shall install ground grids during installation.

5) Take all necessary means to protect excavation and work from erosion.

6) Restore permanent surfaces to BED, City of Burlington Department of Public Works (DPW), property owner specifications, the specification on project drawings and all other attached documents. This includes adhering to the appended 2021 CAP plan from 405 Pine Streets previous site work.

7) Contractor shall adhere to all requirements outlined within the Grant of Environmental Restrictions and Right of Access document and appended to this RFP.

8) Contractor shall adhere to all requirements outlined within the soil management plan document prepared by VHB and appended to this RFP.

9) All work as specified on the Project General Specifications document and drawings.

The Contractor shall provide unit pricing in the Work Item Bid Sheet. The unit pricing shall include all costs to install the conduit system and hand holes, this includes but is not limited to equipment cost; cost to excavate and backfill the trench; [excavate, place and backfill hand holes; disposal of concrete sidewalk; disposal of asphalt; cost of conduits, conduit sweeps, spacers, pull rope, anchors; install the conduit system, core drilling of utility holes, concrete encasement of conduits per BED's specs, installing plastic warning tape above the conduits during backfilling, cost to restore temporary and permanent surfaces, digging access pits, drilling / moling, etc.

When there is a need to re-route section(s) of the proposed ductbank or conduit system, add or delete section of conduits or CDR boxes, the Contractor will provide BED with the excavation/administrative fee for this work. This excavation/administrative fee and the Total Cost ($/ft) or ($/CDR) Unit Pricing provided in the Work Item Bid Sheet will be used for re-routing the proposed ductbank, adding or deleting section of conduits or Utility Hole from the Project per all requirements on the Project General Specifications document, BED's project drawing # D15080100, and all attached documents. The addition, deletion or any modification to the proposed project must be approved in writing by BED's Director of Engineering.

Any addition or subtraction amounts to the project from this point forward will have to be done in the form of change orders that would need to be agreed upon by both parties in writing before the affected work begins. Any changes that deviate out in the field from the technical specifications, drawings or purchase order require prior approval by Burlington Electric Department in the form of a Change Order to the original purchase order agreement. If the Change Order is not secured by the Contractor before the work begins, then Burlington Electric Department is not responsible for any of the material or work performed by said contractor. If said unauthorized work would have resulted in a credit for Burlington Electric Department, then the Unit Pricing Work Sheets provided in the RFP will be used to determine the credits used for deduct. If the work that was done would have resulted in an extra cost to Burlington Electric Department, the contractor will not be receiving any payment for goods or services due to this non compliance of unauthorized work.

B. Site Walkthrough

A site walkthrough will be hosted in the rear parking lot of 405 Pine Street Burlington, VT as specified by the project schedule. All contractors participating in the RFP process must attend the site walkthrough. Confirm with Stephen Scott sscott@burlingtonelectric.com that you will be attending the walkthrough.

C. Safety

Prior to the start of contracted work, the assigned BED employee(s) will review, with the Contractor, the written safety information located on the BED Purchase Order. The information is:

THE CONTRACTOR SHALL COMPLETE A DAILY WRITTEN PRE-JOB SAFETY BRIEFING PRIOR TO COMMENCING ANY WORK FOR BED. THAT WRITTEN BRIEFING SHALL BE MADE AVAILABLE UPON REQUEST. THE CONTRACTOR SHALL COMPLY WITH ALL APPLICABLE STANDARDS (SPECIFICALLY INCLUDING OSHA, VOSHA AND ANY OTHER STATE AND LOCAL OSHA PROGRAM), LAWS, ORDINANCES, RULES, REGULATIONS AND ORDERS OF ANY PUBLIC BODY HAVING JURISDICTION FOR THE SAFETY OF PERSON OR PROPERTY TO PROTECT THEM FROM DAMAGE, INJURY, OR LOSS. CONTRACTORS SHALL ERECT AND MAINTAIN ALL NECESSARY SAFEGUARDS FOR SUCH SAFETY AND PROTECTION.

BED will transfer information (site specific) such as status of power lines and clearance orders, grounding requirements, environmental requirements, potential hazards, and BED expectations. All this shall be documented through a BED safety tailboard prior to work beginning. BED will also update Contractor immediately, via a new BED safety tailboard, if any such information changes. In addition to receiving this briefing, the Contactor is still required to complete their own task specific written job briefing. This is to be done daily and will be verified by the assigned BED employee(s) upon BED's daily communication with the Contractor.

D. Proposal Format

Part I -- Summary

This section should contain a summary of the company and contact information including name, mailing address, email address, and phone number.

Part II -- Technical Proposal

This section should describe the proposer's approach and plans for accomplishing the specified scope of work. This section should contain but is not limited to the following:

- Materials – description of all materials used for construction (PVC, HDPE, etc.)
- Strategic approach to installation of conduit and underground structures.
- Any expected conflicts with existing utilities, private property, vegetation, etc.
- A summary description of the project plan; milestone tasks with expected timeline. This should include materials staging, equipment rental, outside subcontractors, expected outages to BED equipment or services, etc.

Part III -- Cost Proposal

The following fixed cost unit pricing chart shall be filled out by the contractor:

DESCRIPTION	Estimated Distance (ft)	Estimated Quantities	Trench Backfill Cost ($) (A)	Restoration Cost ($) (B)	Conduits & Installation Cost ($) (C)	Concrete Encasement Cost ($) (D)	Total Cost ($/ft) (A+B+C+D)/ ft	Per Unit installation Cost ($) (E)	Total BED Cost = A+B+C+ D+E ($)
PM#673 to Meter Pedestal: (1) 4 inch PVC SCH 80 conduit	290								
Meter Pedestal to EVSE#1: (1) 2" PVC SCH80 conduit.	10								
P899 to BT HH#1: (1) 2" PVC SCH40 conduit 8	15								
Install 4" BED sweeps	2								
Install 2" sweeps	2								
Install 1.25" sweeps	2								
Meter pedestal concrete base		1							
Core bore 4" conduit		1							
Intercept conduit at existing EV charger base		2							
Install parking stall wheel stops		4							
Total Project Cost									

** All Cost includes removal and planting of trees.

P = Pole, HH = Handhole

Bid Item | Grand Total Project Cost

Total BED's Cost: $_____

Comments/Exceptions:_____
_____
_____
_____
_____
_____
_____
_____
_____
_____
_____

Part IV -- Professional Experience & References – Unit Information

This section should contain all pertinent information relating to the proposer's organization, including licensure and experience demonstrating that the proposer is well-qualified to complete the project. This information must also include any sub-contractors that would be involved in the project.

Part V -- Additional Information

This section should contain any additional information that the proposer feels is pertinent information that has not been mentioned anywhere else in the RFP.

IV. Proposed Schedule

Milestone	Date
Release of Formal RFP	5/1/2026
Site Walkthrough	5/7/2026 9:30 AM
Last Date to Submit Written Proposal	5/14/2026 11 AM
Evaluation of Proposals	Week of 5/15/2026 – 5/22/2026
Selection of contractor	Week of 5/15/2026 – 5/22/2026
Date project may begin	5/25/2026
Date project must be completed	6/8/2026 5 PM

V.

Evaluation of Proposals

Proposal evaluation criteria will include but are not limited to:

- Quality of the proposal
- The cost of the proposal along with any additional cost BED would incur.
- Risks associated with the proposal
- Qualifications and experience of company/personnel
- The ability to meet the requirements of the RFP
- Prior performance of the proposer on projects of similar scope and size
- Compliance with the terms, conditions, and other provisions of the RFP
- Proof of insurance.
- Livable Wage Certificate
- Outsourcing Ordinance
- Union Deterrence

A. Amendment or Cancellation of RFP

The Department reserves the right to amend or cancel this RFP at any time if the best interest of the Department requires such action. The Department also reserves the right to award all or partial parts of the RFP to any or several suppliers or whatever is in the best interest of the Department.

B. Proposal Modifications

No additions or changes to any vendor's proposal will be allowed after the proposal's due date unless such modification is specifically requested by the Department.

C. RFP Events and Timing

See section IV. Proposed Schedule

The timing and sequence of events for this project will be determined by the Department. The schedule is planned as above; vendor contacts will be notified of any amendment to this schedule during the RFP Process.

D. Proposal Expenses

The Department assumes no liability for payment of any expenses incurred by any vendor in responding to this RFP.

E. Acceptance or Rejection of Proposals

The Department reserves the right to accept or reject any or all proposals submitted for consideration in whole or in part; and to waive technical defects, irregularities, or omissions, if in its sole judgement the best interests of the Department will be served. The Department further reserves the right to accept a proposal for a contract other than that with the lowest cost, and to negotiate separately with any source whatsoever in any manner necessary to serve the best interests of the Department. The Department also reserves the right to award all or partial parts of the RFP to any or several suppliers that are in the best interest of the Department.

F. Ownership of Proposals

All proposals submitted in response to this RFP shall be become the sole property of the Department.

G. Oral Agreements and Arrangements

Any oral agreement or arrangement made by a vendor with the Department or any Department employee will be disregarded in any Department proposal evaluation or associated award.

H. Provider Presentation of Supporting Evidence/Surety

Vendors must be prepared to provide any evidence of experience, performance ability, and/or financial surety that the Department deems necessary to fully establish the performance capabilities represented in their proposals.

I. Vendor Demonstration of Proposed Services

Not applicable.

J. Vendor Misrepresentation or Default

The Department reserves the right to reject the proposal of any vendor and void any award resulting from this RFP to a vendor who materially misrepresents any product or defaults on any Department contract.

K. Erroneous Awards

The Department reserves the right to correct inaccurate awards resulting from its clerical errors.

L. Public Records

Due regard will be given for the protection of proprietary information contained in all proposals received; however, vendors should be aware that all materials associated with the procurement are subject to the terms of the Vermont Access to Public Records Act (1 V.S.A. Chapter 5, Subchapter 3) and all rules, regulations and interpretations resulting from, and any other applicable rules, regulations or judicial decisions regarding access to the records of government.

It will not be sufficient for vendors to state generally that the proposal is proprietary in nature and not therefore subject to release to third parties. Those particular pages or sections which a vendor believes to be proprietary and of a trade secret nature must be specifically identified as such and must be separated from other sections or pages of their proposal. Convincing explanation and rationale sufficient to justify each exemption from release consistent with Section 316 of Title 1 of the Vermont Statutes Annotated must accompany the proposal. The rationale and explanation must be stated in terms of the prospective harm to the competitive position of the vendor that would result if the material were to be released and the reasons why the materials are legally exempt from release pursuant to the above cited statute. Between a vendor and the Department, the final administrative authority to release or exempt any or all material so identified, rests with the Department. **All materials for which a respondent would like to claim confidential treatment should be uploaded, along with the rational for confidentiality, to the web site https://www.burlingtonelectric.com/rfp in a separate file and with "CONFIDENTIAL" as part of the file name.**

M. Offer of Gratuities

The vendor warrants, represents and certifies that no elected or appointed official or employee of the Department has or will benefit financially or materially from this procurement. Any Contract and/or award arising from this RFP may be terminated by the Department if it is determined that gratuities of any kind were either offered to, or received by any of the aforementioned officials or employees from the vendor, the vendor's agent of the vendor's employees.

N. Inspection of Work Performed

BED will inspect work as it is performed and upon completion of the project. BED reserves the sole right to judge if work is completed satisfies the requirements as specified in this RFP and project contract.

O. Collusion

By responding, the vendors implicitly state that the proposal is not made in conjunction with any competing vendor submitting a separate response to this RFP and that it is in all respects fair and without collusion or fraud.

P. Employee Contact

Any contact with any employee that is not authorized by the Purchasing Department could be considered a violation of the RFP process and could make your submission null and void.

Q. Questions

All technical questions should be directed to Burlington Electric Department Purchasing Department (purchasing@burlingtonelectric.com) and must include the RFP Number in the Subject Line.

VI. Contract Provisions

The obligations of the Department may only be established by a final contract, executed by both parties, that has received all required local and state approvals. Any contract to be entered into between the Department and the successful proposer shall contain negotiated provisions based on the specific requirements set forth in this RFP and the successful proposer's treatment thereof as contained in this proposal, as well as general Department contract provisions.

1. Termination

The contract to be entered into between Burlington Electric Department and the successful proposer shall contain the following provisions dealing with termination. If the Contractor fails to fulfill any of the terms of the agreement on time, the Department shall have the right to terminate the said agreement immediately and award a new contract to another Proposer and the Contractor shall be responsible for damages and for additional costs incurred in reletting the contract.

2. Disclaimer

The Burlington Electric Department is not liable for any costs incurred by proposers in the preparation of proposals or for any work performed prior to the approval of an executed contract.

3. Delivery of Proposals

There will be no formal RFP opening. All RFPs are to be uploaded to our secure web site https://www.burlingtonelectric.com/rfp using your unique login (registration is required). When registering, please select “Consultant” for the category. We will not accept any

mailed or emailed responses. In order to be accepted they must be uploaded to the website by the specified date and time. Sending the response to anyone other than this method will make your submission void and will not be accepted.

4. RFP Opening

There will be no formal RFP opening. Information in the RFPs will not be released until the contract is awarded. If you would like to receive the RFP overview results after the award you may do so only in writing (email) to our Purchasing Department. If you would like to review the RFPs that were submitted, you must submit a letter to our Purchasing Department requesting a meeting to review the files in person.

5. Notification of Selection

Award of this bid will be by "Letter of Award" issued by communication from the Department along with a draft contract for the provision of services.

6. Contract Negotiation

Upon award, the Department and the successful proposer will negotiate a contract. The final terms of the contract shall be subject to negotiation between the parties. The selected proposal in whole or in part as well as content from this RFP may be incorporated into and made a part of the final contract. BED reserves the right to terminate such negotiations at any time, and select another proposal, issue a new RFP, or take other action consistent with the best interest of the Department at its sole discretion.

By issuing this RFP the Department is not obligated to award a contract.

7. Right to Submit a Proposal on BED Contracts

Any supplier that is in good standings with all city departments within the City of Burlington may submit a proposal for provision of energy supply as described above. If a potential supplier is found to owe funds or has been removed from any RFP lists within any city department, their RFP will not be considered. Supplier must comply with all provisions as outlined in this RFP in order to be considered.

The contractor shall comply with all applicable federal, state, and local laws, including but not limited to the Burlington Livable Wage Ordinance, the Non-Outsourcing Ordinance, and the Union-Deterrence Ordinance and shall provide the required certifications attesting to compliance with these ordinances (see attached ordinances and certifications).

8. BED Rights:

BED reserves the right to accept or reject any or all proposals received in response to this RFP or to take other action consistent with the best interest of BED. BED reserves the right

to negotiate separately with any source to serve the best interest of BED. ALL SUBMITTED BIDS BECOME THE PROPERTY OF BURLINGTON ELECTRIC DEPARTMENT. AFTER THE AWARDING OF THE CONTRACT TO THE SUCCESSFUL BIDDER, ALL BIDS ARE OPEN FOR PUBLIC VIEWING subject to any confidentiality requirements applicable under Vermont's Access to Public Records Law exclusions.

877 127

(19) SFV Receive and rec of Burlir Vermon

SDMS DocID 262812 .231

GRANT OF ENVIRONMENTAL RESTRICTIONS AND RIGHT OF ACCESS

405 Pine Street

Attest: J. LaMarche

THIS AGREEMENT is made this 11th day of June, 2004 by and between **S & S VENDING CO.**, a Vermont corporation (hereinafter referred to as "Grantor"), having an address of 20 Karen Drive, South Burlington, VT 05406, and the State of Vermont Agency of Natural Resources, and any successor agencies of the State of Vermont (hereinafter referred to as "the State" or the "Grantee").

WITNESSETH THAT:

WHEREAS, the United States Environmental Protection Agency (hereinafter "EPA") has, pursuant to Section 105 of the Comprehensive Response, Compensation and Liability Act ("CERCLA"), placed on the National Priorities List certain lands and premises in the vicinity of Pine Street in Burlington, Vermont, such lands and premises being known as "the Pine Street Canal Superfund Site" (the "Site");

WHEREAS, EPA has selected a "remedial action" for the Site and has defined the extent of the Pine Street Canal Superfund Site in a Record of Decision ("ROD") dated September 29, 1998;

WHEREAS, EPA has determined in the ROD that certain easements, rights, obligations, covenants and restrictions, as more particularly set forth below, are necessary at certain portions of the Site and adjoining properties to ensure that future activities on these properties do not interfere with the remedial actions, or substantially increase the ecological, human, or environmental risks at the Site;

WHEREAS, the undersigned Grantor is the owner of certain lands and premises described in Exhibit A hereto (the "Property") which property is adjacent to and partially within the Site; and

WHEREAS, the Grantor is on notice of the potential existence of hazardous substances on the Site and the Property; and

WHEREAS, the Grantor is on notice that any disturbance of the Property which causes migration of hazardous substances within the Site or to locations beyond the Site may result in liability under CERCLA; and

WHEREAS, under the terms of a Consent Decree filed in the case of United States of America and the State of Vermont v. Green Mountain Power Corporation et. al, Civil Action Nos. 1:99-CV-366 and 1:00-CV-17 (D.Vt.) (the "Consent Decree"), entered into, by, and between Settling Defendants, the United States, and the State, the Performing Defendants have agreed to perform the remedial action selected for the Site in the ROD, in order to protect the public health and welfare and the environment from the actual or threatened release of hazardous wastes or hazardous substances at or from the Site. The Owner Settling Defendants have agreed, jointly and severally with the Performing Settling Defendants, to reimburse the United States and the State for certain costs, as provided in the Consent Decree, and have severally agreed to provide a right of access to their property for purposes of implementing, facilitating and monitoring the remedial action, and to submit to permanent use restrictions on their property as covenants that will run with the land for the purpose of protecting human health and the environment.

A copy of the Consent Decree is available from:

Office of Environmental Stewardship
United States Environmental Protection Agency
One Congress Street
Boston, MA 02214
Attn: Pine Street Canal Superfund Site Attorney

WHEREAS, Grantor wishes to cooperate fully with EPA and the Grantee in implementation of all response actions at the Site;

NOW, THEREFORE,

1. In consideration of the agreements reached in the Consent Decree, Grantor, on behalf of itself, its successors, heirs and assigns, hereby grants to the Grantee and its assigns the easements, rights, obligations, covenants, and restrictions (hereinafter, collectively referred to as the "Environmental Restrictions"), the terms and conditions of which are set forth below.

2. Purpose. It is the purpose of this instrument to convey real property rights to the Grantee, which will run with the land, to facilitate the implementation of the remedial action and to protect human health and the environment.

3. Right of Access. In establishing the within Environmental Restrictions, Grantor hereby grants to the Grantee, their authorized representatives (including but not limited to EPA), and assigns, a right of access at all reasonable times to the Property for the purpose of conducting any activity related to the Consent Decree including the following purposes:

   (a) Monitoring the Work or the Projects;

   (b) Verifying any data or information submitted to the United States and the State;

   (c) Conducting investigations relating to the contamination at or near the Site;

   (d) Obtaining samples;

   (e) Assessing the need for, planning, or implementing additional response actions at or near the Site;

   (f) Implementing the Work pursuant to the conditions set forth in Paragraph 104 of the Consent Decree;

   (g) Inspecting and copying records, operating logs, contracts, or other documents maintained or generated by Settling Defendants or their agents,

consistent with Section XXIV (Access to Information) of the Consent Decree;

(h) Assessing Settling Defendants' compliance with the Consent Decree; and

(i) Determining whether the Site or other property is being used in a manner that is prohibited or restricted, or that may need to be prohibited or restricted, by or pursuant to the Consent Decree.

(j) To the extent practicable, prior to accessing the property, Grantee, its authorized representatives (including but not limited to EPA) and/or its assigns shall give Grantor, its successors or assigns, reasonable notice of its intent to access and shall try to reasonably coordinate such access so as to minimize the disruption of activities on the property conducted by Grantor, its successors or assigns. In exercising its rights of access, Grantee, its authorized representatives (including EPA) and its successors or assigns shall make reasonable efforts to minimize interference with the activities of Grantor, its successors or assigns on the property.

4. Restricted Uses and Activities. Grantor shall neither perform, nor allow, nor cause any other person to perform, any activities or uses in, on, upon, through, over or under those portions of the Property which violate one or more of the following conditions:

(a) Grantor shall be responsible for complying with all federal, state, and local laws and regulations regarding the handling and disposal of hazardous substances, pollutants or contaminants;

(b) Grantor shall not use the Property or allow the Property to be used so as to unreasonably interfere with any investigations of the environmental conditions at the Site;

(c) Grantor shall not use cause or allow recontamination of the Site following completion of the Remedial Action to such an extent that the remedial action or its performance standards may be jeopardized, or cause contamination of off-site properties following completion of the Remedial Action;

(d) Grantor shall not use the Property or allow the Property to be used for residential use or for day care centers for the care of children;

(e) Grantor shall not use or allow the use of the groundwater on the Property for potable drinking water purposes and shall not install or allow the installation of wells at any location where free phase contamination has been shown to be present;

(f) Grantor shall not perform or allow to be performed on the Property any construction activities which will change hydrogeologic conditions and will likely cause migration of contaminated groundwater to Lake Champlain to

such an extent that the remedial action may be jeopardized or that a significant risk to Lake Champlain may result;

(g) Grantor shall not perform or allow to be performed excavations to depths greater than five feet (including such excavations which extend below the water table) on the Property unless one or more of the following exceptions apply: (1) the excavation is performed to install, repair, maintain, service, or remove underground utility components, conduits, installations, or channels, which may presently be in place deeper than five feet and which may be below the water table; (2) the excavation consists of drilling, driving, or boring to install pilings for otherwise allowable construction; (3) the excavation is performed in a location on the property in which current contaminant concentrations at depths greater than five feet are below 140 mg/kg total polycyclic aromatic hydrocarbons ("PAH"). In the case of exceptions (1) and (2), the owner of the property shall require workers conducting the excavations and working in the area to use appropriate personal protective equipment as required by the Occupational Health and Safety Administration ("OSHA") or its successor agencies, unless a site specific risk assessment is performed and its results have been approved by EPA prior to the excavations.

5. Emergency Excavation. In the event it becomes necessary to excavate a portion of the Property as part of a response to emergency repair of utility lines, or as part of a response to emergencies such as fire or flood, the activity and use restriction provisions of Paragraph 4 above, which would otherwise restrict such excavation, shall be suspended only with respect to such excavation for the duration of such emergency response, provided that Grantor:

(a) orally notifies the Site Manager for the Vermont Department of Environmental Conservation (VT DEC) and EPA's Project Coordinator (or, in his or her absence, EPA's Alternate Project Coordinator, or in the event that both of EPA's designated representatives are unavailable, the Director of the Office of Site Remediation and Restoration, EPA Region I), of such emergency as soon as possible but no more than twenty-four (24) hours after having learned thereof, and follows up with a written notice to VT DEC and EPA; and

(b) limits the actual disturbance involved in such excavation to the minimum reasonably necessary to adequately respond to the emergency.

This provision shall not waive any liability for releases of hazardous substances, nor shall this provision excuse compliance with CERCLA or any other applicable federal or state laws and regulations.

6. Severability. If any court or other tribunal determines that any provision of this Grant is invalid or unenforceable, such provision shall be deemed to have been

modified automatically to conform to the requirements for validity and enforceability as determined by such court or tribunal. In the event the provision invalidated is of such a nature that it cannot be so modified, the provision shall be deemed deleted from this Grant as though it had never been included herein. In either case, the remaining provisions of this Grant shall remain in full force and effect; provided, however, that the Grantee retains its right to request modification of this Grant pursuant to Paragraph 11 below.

7. Enforcement. Grantor expressly acknowledges that a violation of the terms of this Grant could result in enforcement by the Grantee, including, but not limited to, the issuance of criminal and civil penalties, and/or equitable remedies. Grantor also agrees, on behalf of itself and its successors and/or assigns, that EPA shall also have a third party right of enforcement. Any action taken by the Grantee, or EPA pursuant to this Paragraph 7 shall be in addition to, but not in lieu of, such rights as EPA and/or the State possess to enforce the terms and conditions of the Consent Decree and under applicable law, which enforcement rights the State and EPA fully reserve.

8. Provisions to Run With the Land. The easements, rights, obligations, covenants, and restrictions set forth in this instrument shall run with the land, and any portion thereof, and shall be binding on the Grantor, the Grantor's heirs, administrators, successors, or assigns, and shall inure to the benefit of the Grantee and its successors. It is the parties' intent that the United States shall be a third party beneficiary of the terms of this instrument, with full authority to enforce the terms of this instrument as provided herein.

9. Incorporation into Leases. Grantor hereby agrees to incorporate this Grant, in full or by reference, into all leases, licenses, occupancy agreements, or any other instrument of transfer by which a right to use the Property, or any portion thereof, is conveyed. Any transfer of the Property, or any portion thereof, shall take place only if the grantee (including but not limited to any lessee) agrees, as a part of the agreement to purchase or otherwise obtain a property interest in the Property, that it will comply with the obligations of the Grantor to provide access and/or Institutional Controls, as set forth in Section IX of the Consent Decree and this Grant, with respect to such Property.

10. Recordation. Grantor shall record and/or register this Grant with the Register of Deeds or other appropriate land records office in the City of Burlington, Chittenden County, State of Vermont within fifteen (15) days of having received the Grantee's written approval of this Grant. The Grantor, within twenty-one (21) days of receipt of evidence of recordation and/or registration, shall mail a certified Registry copy of this Grant to the VT DEC Site Manager and the EPA Project Manager.

Grantor shall record and/or register any amendment to or release of this Grant, made pursuant to Paragraph 11 below, with the Register of Deeds or other appropriate land records office in the City of Burlington, Chittenden County, State of

Vermont within thirty (30) days of having received from the Grantee said amendment or release, as agreed to and accepted by, or granted by, the Grantee and mailed to Grantor by certified mail, return receipt requested. Grantor shall file with VTDEC's and EPA's Site Managers a certified Registry copy of any such amendment or release as recorded and/or registered, within twenty-one (21) days of receipt of evidence recordation and/or registration

This Grant shall become effective upon its recordation and/or registration with the Register of Deeds or other appropriate land records office in the City of Burlington.

11. Amendment, Modification and Release. This Grant may be amended, modified, or released only by the State, in accordance with CERCLA and the NCP, to the extent applicable, if EPA agrees in writing with the proposed amendment, modification or release. However, in no instance may the Grantee amend or modify this Grant to confer more rights in the Property than those accorded to the Grantee herein. Grantor may submit to the VTDEC Site Manager a proposal for modifying or withdrawing the terms and conditions of this instrument or a portion thereof, with a copy to the EPA Project Manager. Said proposal shall demonstrate that the terms and conditions contained herein may be modified or withdrawn in whole or in part consistent with the public interest and the public purposes of protecting human health and the environment. The Grantee, if EPA agrees in writing, shall issue a written decision on the approval, modification, or denial of such petition. Grantor shall pay any and all recording fees, land transfer taxes and other such transactional costs associated with any such amendment, modification, or release.

12. No Dedication Intended. Nothing herein set forth shall be construed to be a gift or a dedication of the Property to the Grantee, or to the general public for any purpose whatsoever.

13. Rights Reserved. It is expressly agreed that acceptance of this Grant by the Grantee shall not operate to bar, diminish, or in any way affect any legal or equitable right of the State and/or EPA to issue any future order or take response action with respect to the Site or in any way affect any other claim, action, suit, cause of action, or demand which the State and/or EPA may otherwise possess with respect thereto.

14. Dispute Resolution. The dispute resolution procedures of this Paragraph 14 shall be the exclusive mechanism to resolve disputes between the Grantor, the Grantee and EPA regarding petitions for amendment, modification, and release under Paragraph 11 of this Grant. All other disputes between Grantor, the Grantee, and EPA shall be resolved according to the terms of Section XIX of the Consent Decree.

    (a) Informal Negotiations – Any dispute shall in the first instance be the subject of informal negotiations between the parties to the dispute. The period for informal negotiations shall not exceed 30 days from the time the dispute arises, unless it is modified by written agreement of the parties. The dispute

shall be considered to have arisen when one party sends the other parties a written Notice of Dispute. In the event that the parties cannot resolve a dispute by informal negotiations under this subparagraph 14(a), then the position advanced by EPA shall be considered binding unless, within twenty-one (21) days after the conclusion of the informal negotiation period, Grantor invokes the formal dispute resolution procedures by serving on the Grantee and EPA a written Statement of Position on the matter in dispute, including, but not limited to, any factual data, analysis or opinion supporting that position and any supporting documentation relied upon by the Grantor. Within twenty-one (21) days after receipt of Grantor's Statement of Position, the Grantee and/or EPA will serve on Grantor its Statement of Position, including, but not limited to, any factual data, analysis, or opinion supporting that position and supporting documentation.

(b) Formal Dispute Resolution – Formal dispute resolution shall provide for review on the administrative record under applicable principles of administrative law. An administrative record of the dispute shall contain all Statements of Position, including supporting documentation, submitted pursuant to this subparagraph 14 (b). Where appropriate, supplemental Statements of Position may be provided by EPA, the Grantee or the Grantor. The Grantee, in consultation with EPA's Director of the Office of Site Remediation and Restoration, New England Region, will issue a final administrative decision resolving the dispute based on the administrative record. This decision shall be binding upon the Grantor, subject only to the right to seek judicial review pursuant to subparagraph 14(c) below.

(c) Judicial Appeal – Any administrative decision made pursuant to subparagraph 14 (b) shall be reviewable by the United States District Court for the District of Vermont (the court having jurisdiction over the Consent Decree), provided that a notice of judicial appeal is served by the Grantor on the Grantee, and EPA, and within 10 days of receipt of the final administrative decision. The notice of judicial appeal shall include a description of the matter in dispute, the efforts made by the parties to resolve it, and the relief requested. The Grantee and/or EPA may file within 30 days a response to Grantor's notice of judicial appeal. In proceedings on any dispute governed by this subparagraph 14(c), Grantor shall have the burden of demonstrating that the decision of the Grantee pursuant to subparagraph 14(b) is arbitrary and capricious or otherwise not in accordance with law. Judicial review of the decision pursuant to subparagraph 14(b) shall be on the administrative record compiled pursuant to subparagraph 14(b) above.

15. Grantor, on behalf of itself, its successors, heirs, administrators and assigns, hereby waives any claims against the United States and the State arising under the United States Constitution, the Vermont Constitution, state law, the Tucker Act, 28 U.S.C. §1491, or common law, arising out of or relating to this grant of environmental restrictions and access.

IN WITNESS WHEREOF, GRANTOR as record title-holder of the above described Property, hereby submits this GRANT OF ENVIRONMENTAL RESTRICTIONS AND RIGHT OF ACCESS, which said Grant shall be recorded in the Land Records of the City of Burlington, Vermont.

Dated this 11th day of June, 2004.

Witness: Grantor: **S & S VENDING CO.**

By: _____
Name:
Its Duly Authorized Agent

State of Vermont
County of Chittenden

On this 11th day of June, 2004, personally appeared Louis G. Farrell, signer and sealer of the foregoing written conveyance and acknowledged the same to be his own free act and deed and the free act and deed of the Grantor.

Before me, _____
Notary Public
My Commission Expires: 2-10-07

The undersigned, the holder of a mortgage dated August 22, 2001 recorded in the Land Records of the City of Burlington, Vermont, in Book 698, Page 533, by execution hereof, agrees that the rights and easements reserved to it and to the portion of the property described therein, shall be subject and subordinate to the terms and provisions of this Instrument.

CHITTENDEN TRUST COMPANY D/B/A
CHITTENDEN BANK

WITNESS:

By:
Its Authorized Representative Michael Seaver
Address: Two Burlington Sq
Burlington VT
05401

STATE OF VERMONT
COUNTY OF Chittenden

On this 11th day of June, 2004, before me, the undersigned Notary Public in and for the State of Vermont, duly commissioned and sworn, personally appeared Michael Seaver of Chittenden Trust Company d/b/a Chittenden Bank and (s)he acknowledged said Instrument, as executed, to be his or her free act and deed in said capacity, and the free act and deed of Chittenden Trust Company d/b/a Chittenden Bank.

NOTARY PUBLIC

My Commission Expires: 2-10-07.

F:\WPDOCS\G\GMP\PineS:\Easements\S&SVending-2004.doc

EXHIBIT A
to
GRANT OF ENVIRONMENTAL RESTRICTIONS AND RIGHT OF ACCESS

Grantor: S & S VENDING CO.
Property Address: 405 Pine Street

Property Description

A lot of land with all buildings thereon located on Pine Street in the City of Burlington, Vermont being known and designated as 405 Pine Street.

Being all and the same lands and premises conveyed to S & S Vending Co. by Quit Claim Deed of Louis G. Farrell, dated September 12, 2000 and recorded in Volume 658 at Page 679 of the City of Burlington Land Records.

Being all and the same land and premises conveyed to Louis G. Farrell by Second Partial Decree of Distribution in the Estate of Louis G. Farrell issued by the Chittenden Probate Court on October 31, 1983, and recorded in Volume 658 at Page 674 of the City of Burlington Land Records.

Being all and the same land and premises conveyed to Louis E. Farrell, Thomas A. Farrell, and J. Nelson Farrell by the following deeds:

1. Quit Claim Deed of Shepard & Morse Lumber Company, dated March 14, 1942 and recorded in Volume 114 at Page 252 of the City of Burlington Land Records; and

2. Warranty Deed of Maltex Company, dated March 19, 1942 and recorded in Volume 117 at Page 612 of the City of Burlington Land Records.

Thomas A. Farrell and J. Nelson Farrell conveyed their undivided 2/3 interest in the Subject Premises by Warranty Deed dated September 1, 1944 and recorded in Volume 122 at Page 348 of the City of Burlington Land Records, which interests are more particularly described therein as follows:

"First: Our undivided two-thirds interest in that certain lot of land situated on the west side of Pine Street and bounded on the north by land of the Citizens Coal Company, on the east by west line of Pine Street, on the south by land hereinafter described as the second parcel in this conveyance and on the west by the new basin, so-called. Said lot is supposed to have a frontage on

Pine Street of 155.5 feet, more or less, and on the basin of 150 feet, more or less and a depth, along the north line of 469.4 feet, more or less.

"Being a portion of the same land and premises conveyed to Shepard and More Lumber Company by the Shepard and Morse Lumber Company, a Massachusetts corporation, by its Quitclaim deed dated October 12, 1884, and recorded in vol. 17, at page 471 of the City of Burlington land records; and also a portion of the same land and premises which were conveyed to Shepard, Hall and Davis by Barnes and Skillings by warranty deed dated November 26, 1869 and recorded in vol. 5, page 294 of said land records. Being also our undivided two-thirds interest in the land conveyed to Thomas A Farrell and J. Nelson Farrell, and to said Louis E. Farrell by Quitclaim deed from the Shepard and Morse Lumber Company, a Maine corporation, dated March 14, 1942 and recorded in vol. 114 at Page 252 of the City of Burlington land records.

"Reference is made to the following deeds and their records in aid of this description: of Warranty deed of Shepard and Hall to the Shepard and Morse Lumber Company (a Mass. Corporation), dated December 11, 1879, recorded at vol. 16, page 175-6 of said records; and Quitclaim deed of the Mial Davis to Shepard and Hall dated May 1, 1876, recorded at vol. 9 page 420 of said records.

"This conveyance is made subject to a right of way 12 feet wide, for a railroad track, over so much of said land as abuts on the west line of Pine Street, said track to be for the use of all abutters, all as reserved in said deed of Barnes and Skillings, to Shepard, Hall and Davis.

"Second: Our undivided two-thirds interest in a parcel of land of uniform width of 50 feet and depth of 470 feet off the northerly portion of lands and premises conveyed to the Maltex Company by Bertha Wells Jackson and Frank R. Wells by their warranty deed, dated December 24, 1941 and recorded in Book 117, Page 532 of the City of Burlington Land Records and bounded by a line running as follows: Beginning at the northeast corner of said whole parcel of land, which point is in the westerly street line of Pine street; thence southerly in the west line of Pine Street 50 feet; thence westerly parallel with the northerly line of the premises conveyed to the within grantor, as above described, 470 feet; thence northerly parallel with the westerly line of Pine Street to the northerly line of the whole of said premises; thence easterly along the northerly line of the whole of said premises to the place of beginning.

"Reserving and subject to a right of way 12 feet wide across the east end of said land adjoining Pine Street, for a railroad track to be used in common by all parties over whose land the same may be constructed in forming a connection with the Rutland Railroad.

"Also reserving a right of way for railroad tracks and for a driveway over and across a strip of land 30 feet wide (including said 12-foot right of way above) off the east end of said land adjoining Pine Street, the same to be used in common by the grantor and grantees herein and their respective successors, heirs and assigns. Being all of the undivided two-thirds interest of the grantors herein in the land and premises conveyed to said Thomas A. Farrell and J. Nelson Farrell and to the said Louis E. Farrell as tenants in common by a warranty deed from the Maltex Company, a partnership composed of F.H. Shepardson and F.W. Shepardson, dated March 19, 1942 and recorded at vol. 117 page 612 of the City of Burlington land records.

"Said premises are not our homestead or the homestead of either of us."

The premises are subject to all covenants, restrictions, easements and rights of way of record, not meaning to reinstate any claims barred by operation of the Vermont Marketable Record Title Act, 27 V.S.A. §§ 601-612, both inclusive.

Reference is hereby made to the above-referenced documents, the instruments therein described, and the references therein contained in further aid of this description.

S&S VENDING CO.

SECRETARY'S CERTIFICATE

I, **Barbara C. Kohler**, the duly elected, qualified, and acting Secretary of S&S Vending Co. (the "Corporation"), a corporation duly organized and existing under the laws of the State of Vermont, hereby certify that:

The resolutions attached hereto as Exhibit A have been duly adopted by the Directors of the Corporation pursuant to a Unanimous Written Consent in Lieu of Special Meeting(s) dated as of April 01, 2004. Said resolutions have not been amended or repealed and remain in full force and effect as of the date hereof.

IN WITNESS WHEREOF, I have hereunto set my hand and affixed the seal of the said Corporation this 11th day of June, 2004.

Barbara C. Kohler

Barbara C. Kohler, Secretary

louise\wss\corp\s&s.sc

S&S VENDING CO.

Exhibit A

RESOLVED: That the Corporation hereby authorizes the "Grant of Environmental Restrictions and Right of Access" (the "Easement") related to property at the Pine Street Barge Superfund Site, known specifically as 405 Pine Street, Burlington, Vermont (Tax Map Number: 053-1-005-000), and the execution of such documents, agreements or contracts necessary to complete the Easement, and the performance of all such other acts as may be required to complete the Easement.

RESOLVED: That Louis G. Farrell, President of the Corporation and Shannon Farrell, Vice President of the Corporation (the "Authorized Persons"), or either one of them, are hereby authorized and directed to execute, deliver and perform the Easement. The Authorized Persons, or either one of them, are hereby authorized and directed to take such actions and execute such additional documents as such Authorized Persons, or either one of them, deem necessary or appropriate to complete the Easement, with the taking of such action and the execution of such documents by such Authorized Persons, or either one of them, to be conclusive evidence that the same is authorized by this resolution. The execution of the above-referenced documents by the Authorized Persons does not violate any of the terms and conditions of the Corporation's organizational documents or any other agreements to which the Corporation is a party or bound.

RESOLVED: That any and all such actions taken by the Authorized Persons, or either one of them, prior to the date hereof, performed on behalf of the Corporation in order to complete the Easement are hereby ratified, adopted and approved.

STATE OF VERMONT

OFFICE OF SECRETARY OF STATE

Certificate of Good Standing

I, Deborah L. Markowitz, Secretary of State of the State of Vermont, do hereby certify according to the records of this office

S & S VENDING CO.

a corporation formed under the laws of Vermont

was filed for record in the office on June 13, 2000

I further certify that the corporation has perpetual duration, that its most recent annual report is on file, and that articles of dissolution have not been filed.

March 11, 2004

Given under my hand and the seal of the State of Vermont, at Montpelier, the State Capital

Deborah L. Markowitz
Secretary of State

405 Pine Street – EV Charging Station Conduit

Soil Management Plan

Burlington, VT

PREPARED FOR

Michael Flora
Burlington Electric Department
585 Pine Street #4864
Burlington, VT 05401

PREPARED BY

20 Winooski Falls Way, Suite 400B
Winooski, VT 05404
802.497.6100

April 27, 2026

Table of Contents

Introduction **1**

1.1 Project Description 2
1.2 SMP Goals and Objectives 2

Summary of Prior Investigations and Corrective Actions **4**

2.1 Contaminant Sources 5

Site Specific Soil Management Requirements **6**

3.1 Temporary Stockpiling 6
3.1.1 On-Site Poly-encapsulation of Temporary Soil Stockpiles 7
3.1.2 Additional Requirements for Temporary Off-Site Soil Stockpiling 7
3.2 Soil Stockpile Characterization Sampling 8

Construction Soil and Groundwater Management Plan **9**

4.1 General Construction Procedures 9
4.1.1 Preconstruction Preparation 9
4.1.2 Contaminated Soil Handling Monitoring and Documentation 9
4.1.3 Contaminated Soil Trucking Procedures 10
4.1.4 Erosion Prevention and Sediment Control 10
4.1.5 Dust Monitoring and Control 11
4.2 Off-Site Soil Disposal at a Landfill 11
4.3 Off-Site Soil Reuse in an Urban Area 11
4.4 Isolation Barrier Requirements 12
4.5 Groundwater Management 12
4.6 Contingency Measures 12

Project Contacts and Schedule **14**

Completion Reporting **15**

References **16**

List of Appendices

Appendix No.	Description
Appendix A	LE Environmental Figures
Appendix B	Project Plans (BED)
Appendix C	Groundwater Management Area (VHB)
Appendix D	Management of Non-Hazardous Contaminated Soil Request Form (DEC)

1

Introduction

On behalf of the Burlington Electric Department ("BED"), VHB has prepared this Soil Management Plan ("SMP") to support the installation of buried electric conduit ("the Project") at the Burlington City Arts Studios located at 405 Pine Street, Burlington ("Site"). The conduit is for electric vehicle ("EV") charging stations adjacent to the northern Site boundary. The Project will be accomplished through directional drilling with minimal excavation required.

The Site property is located adjacent to the Pine Street Canal Superfund site listed by the United States Environmental Protection Agency ("EPA"). The Site is also a State-listed hazardous site on the Vermont Department of Environmental Conservation ("DEC") Sites Management Section ("SMS") database and assigned Site #2019-4876. As such, the Project will be performed by the BED-retained Contractor in accordance with the provisions set forth in the Grant of Environmental Restrictions and Right of Access (ANR, 2004) and the Certificate of Completion (DEC, 2026) documents specific to the 405 Pine Street Site.

The Site is enrolled in DEC's Brownfields Reuse and Environmental Liability Limitation Program ("BRELLA") program. Multiple environmental investigations and remediation activities have been performed on the Site. The primary contaminants of concern in isolated locations on Site were identified as polycyclic aromatic hydrocarbons ("PAHs") in shallow soil, and arsenic and naphthalene in groundwater. Arsenic in groundwater above the applicable standard was identified outside of the Project area.

A Corrective Action Plan ("CAP," LEE, 2021) was developed and implemented by LE Environmental LLC ("LEE") related to the management of non-hazardous waste PAH-contaminated soil ("contaminated soil") during Site redevelopment activities. Relevant figures from LEE reports are included as **Appendix A**. The CAP included installation of an engineered isolation barrier over contaminated soil in the Project area. While no exceedances of PAHs above the Urban Background Standard in soil were reported in the proposed area of limited earth disturbance, representative soil data was not collected by LEE in the exact locations proposed for excavation. Therefore, VHB proposes temporary stockpiling, sampling, and analysis of the excess soil generated during the Project. These data will be used to determine appropriate management of excess soil (see Section 3).

During Project construction, soil will be disturbed in isolated locations below the existing engineered barrier and will require characterization and appropriate management. As such, this SMP has been prepared in accordance with the DEC Investigation and Remediation of Contaminated Properties Rule ("IRule," DEC, 2024) Section § 35-804(a)(4), and in coordination with the DEC Site Manager, to direct the appropriate soil management protocols and documentation during construction.

1.1 Project Description

The Project includes the installation of buried electrical conduit originating from a transformer located on the west side of Pine Street just off the northeast corner of the Site building, installation of and conduit connection to a meter pedestal, and connection to existing EV charger conduit sweeps. Relevant figures of proposed Project construction plans are included in **Appendix B** and referenced herein as "Project plans."

The Project will be accomplished through directional drilling with minor, supplemental excavation. Directional drilling is expected to minimize the generation of excess soils. Limited excavation will be required in the areas highlighted in yellow in **Appendix B**, to set the directional drilling equipment, install the meter pedestal base, and intercept existing conduit sweeps to the EV chargers. The anticipated maximum depth of Project excavation is 39 inches below grade.

1.2 SMP Goals and Objectives

This SMP is intended to both communicate potential risks to workers in the Project area associated with potential contaminant impacts to soil and groundwater, and provide requirements for the management of soil and groundwater in a manner that is:

- consistent with the DEC IRule;
- protective of human health and the environment, including mitigating risks to sensitive receptors within the Project Area during construction activities and during future public use;
- constructable and practicable; and
- results in the avoidance and minimization of environmental impacts; and

Specific objectives to achieve these goals are as follows:

1. Re-use of excavated soil in same location from which it originated during Project construction to the maximum extent possible, below an isolation barrier.
2. Provide specifications for isolation barriers, to be re-installed over soil remaining in the Project location to mitigate future risk of human contact with contaminated soil.
3. Provide appropriate characterization and management options for excess excavated soil that cannot be reused in the Project.
4. Provide specifications for the appropriate management of groundwater should the Project require dewatering (not anticipated).
5. Identify contingency measures to manage unanticipated evidence of contamination in soil, if it is encountered during construction, that was not previously identified in the CAP.

6. Provide requirements for monitoring and documentation of SMP implementation activities, including a final SMP Completion Report providing details (location, concentration, etc.) of residual contamination, to inform future Site activities and institutional controls.

2

Summary of Prior Investigations and Corrective Actions

Multiple site investigations were conducted at the Site by LEE beginning in 2019 that identified isolated areas of soil and groundwater contamination above applicable Site standards. Relevant soil and groundwater contaminant figures from LEE reports are included as **Appendix A**.

At two locations on Site, shallow soils contained polycyclic aromatic hydrocarbons ("PAHs") at concentrations exceeding the applicable DEC Urban Background Standard of 0.58 mg/kg. These PAH shallow soil exceedance sample locations are outside of the Project area. LEE also identified arsenic and naphthalene concentrations in groundwater in exceedance of their respective Vermont Groundwater Enforcement Standard ("VGES"). Arsenic in groundwater at a concentration above VGES was only identified in monitoring well MW-2, located southwest of, and outside of, the Project area. Naphthalene concentrations above VGES in groundwater were identified in an isolated location within the western extent of the Project.

During Site redevelopment, a CAP was reportedly developed and implemented. Based on VHB's review of the LEE CAP, it appears that LEE categorized shallow soils across the Site as contaminated with PAH concentrations exceeding the Urban Background Standard. The primary remedial action of the CAP was excavation with off-Site disposal of PAH contaminated soil at a landfill, and capping of remaining shallow soils Site-wide. The CAP did not address groundwater contamination. The Corrective Action Construction Completion Report ("CACCR") states that a total of 1,697.45 tons of non-hazardous contaminated soil was generated and disposed of during CAP implementation. Following soil excavation, isolation barriers were installed to protect Site users from direct exposure to impacted soil remaining on Site. The CACCR shows isolation barriers currently in place in the Project area, which include a permeable isolation barrier of 9 inches of clean soil with geotextile fabric across the majority of the grassy Project area (Area ID "I"), and an impermeable isolation barrier of 6-inch thick concrete sidewalk over 8 inches of gravel subbase over indicator fabric where the EV chargers are located (Area ID "A"). A figure of the final isolation barriers installed on Site from the CACCR is provided in **Appendix A**.

Further details regarding previous environmental investigations and Site redevelopment can be found in the CAP.

2.1 Contaminant Sources

The LEE CAP stated that the Site formerly operated as a railyard associated with a nearby railroad depot and that soil "PAH contamination was attributed to the presence of coal ash and foundry wastes observed in surface soils" related to those land uses (LEE, 2021).

The CAP also stated that the source of naphthalene in groundwater along the northern property boundary could be attributed to UST removals in 1986 with documented soil contamination on the property directly north (UST Facility ID 9990053) of the Site with a history of oil storage (LEE, 2021). Although two petroleum USTs were removed from the south side of the Site in 1987, no VOCs were detected above laboratory reporting limits from multiple groundwater monitoring wells in the former UST area on Site, nor from a downgradient well between the former UST area and the Project area. Arsenic in groundwater was attributed to high turbidity in the sample matrix (LEE, 2020), and the reported concentration of 0.012 mg/L just barely exceeded the corresponding VGES (0.01 mg/L).

3

Site Specific Soil Management Requirements

Soil within the Project area was previously classified as non-hazardous waste contaminated soil ("contaminated soil") for the purposes of the CAP based on concentrations of PAHs in Site soil at sampling locations outside of the Project area.

Excess soil generated during minimal excavation during the Project shall be reused to the extent possible within its area of origin, and a restored isolation barrier shall be reestablished. Construction requirements for the isolation barriers shall meet the specifications included in the CAP. Isolation barrier requirements are discussed in detail in Section 4.4.

Based on the directional drilling methods and minor excavation required, a very limited volume of excess soils are expected to be generated during the Project. Considering that PAH soil data collected to date is not considered entirely representative of the soils anticipated to be generated during the Project, there is the potential that the PAH concentrations associated with the excess soil that cannot be returned to the excavation may exceed the Urban Background Standard and therefore require offsite disposal. Likewise, the PAH data could confirm no exceedance of the Urban Background Standard, therefore allowing for reuse of the material on Site or relocation in an "Urban Area" as defined by the Vermont Agency of Natural Resources ("ANR").

Therefore, excess soils generated during the Project should be temporarily stockpiled as outlined in Section 3.1 below and sampled for analysis as outlined in Section 3.2. The results of the analysis will determine the appropriate management options outlined in Section 4.

Final management of Project soil shall be documented in a SMP Completion Report.

3.1 Temporary Stockpiling

Excess soils that cannot be reused in the excavation will require temporary poly-encapsulated stockpiling for laboratory analysis to determine appropriate management options. Prior to

stockpiling activities, a "Management of Non-Hazardous Contaminated Soil Request Form" that identifies the proposed location of temporary stockpiling (whether on- or off-site) will be submitted to DEC for approval. A copy of the form is included as **Appendix D**.

3.1.1 On-Site Poly-encapsulation of Temporary Soil Stockpiles

This section defines the physical requirements for poly-encapsulation of temporary on-site stockpiles of contaminated soil, as needed.

Limited areas of excavation are required for the Project and are identified in yellow in **Appendix B**. During the limited excavation, the Contractor shall "side cast" soils and place them on 6-millimeter (minimum thickness) polyethylene sheeting. In the landscaped Project area, the top 9 inches of clean soil above indicator fabric may be side cast as "clean" soil, and can be reused in kind to restore the isolation barrier following Project completion.

Excavated soils should be returned to the area of origin to the extent possible. Any remaining excess soils should be poly-encapsulated prior to the conclusion of each workday in the following manner. Stockpiles shall be securely enclosed with polyethylene sheeting under and over the pile. The polyethylene sheeting covering the stockpile shall overlay the polyethylene sheeting underlying the stockpile to shed precipitation away from the stockpile and prevent ingress of water into the stockpile. Seams between sheets of polyethylene shall overlap a minimum of 4- feet and shall also be arranged to prevent ingress of water into the stockpile. Poly-encapsulated soil stockpiles shall be covered during significant rain events and when not in active use, including overnight. Polyethylene sheeting shall be adequately secured with weights (potentially connected by ropes) or other means to prevent damage or breaches due to wind/weather. Polyethylene sheeting shall not be weight down with contaminated soil. Poly-encapsulated soil stockpiles shall be inspected daily by the Contractor, and any damaged polyethylene sheeting shall be replaced immediately, or as directed by the EP.

The final poly-encapsulated stockpile will be temporarily opened to collect characterization samples, as detailed in Section 3.2, and the poly-encapsulation re-established pending results of the sample laboratory analysis.

3.1.2 Additional Requirements for Temporary Off-Site Soil Stockpiling

Off-site stockpiling of soil is not anticipated for this Project. However, if it becomes necessary, the Contractor shall obtain written approval from the DEC prior to using any off-site temporary stockpile locations. Temporary off-site stockpiles shall be managed in accordance with IRule §35-803(d)(1) and the requirements enumerated on the DEC "Management of Non-Hazardous Contaminated Soil Request Form" that includes a soil stockpile siting criteria checklist.

Off-site stockpiles of contaminated soil shall meet the physical requirements for poly-encapsulated stockpiling specified in Section 3.1.1. All contaminated soil that is stockpiled off-site shall be removed from the approved off-site location and managed appropriately prior to Project completion.

3.2 Soil Stockpile Characterization Sampling

The excess soil stockpile will be sampled to determine appropriate management. Depending on the results of the stockpile sampling, described below, soil will be transported for off-Site disposal at a certified landfill (Section 4.2) or off-Site reuse in an Urban area (Section 4.3).

VHB will collect discrete samples first for analysis of volatile organic compounds ("VOCs") to avoid loss of volatiles during the compositing process. VHB will screen discrete samples with a calibrated photoionization detector ("PID"). VHB will then collect two, representative ten-part composite soil samples from the stockpile(s) for laboratory analysis.

Soil samples will be stored on ice and transported under chain of custody protocol to a certified analytical laboratory. VHB will request iterative analysis of the soil samples as follows. The samples will first only be analyzed for semi-VOCs ("SVOCs") via EPA Method 8270E and VOCs via EPA Method 8260D. Shallow soil across the Site was sampled by LEE for RCRA 8 Metals and no exceedances of the Residential Vermont Soil Standard ("VSS") was reported.

Should the SVOC analytical results suggest that PAH concentrations exceed the Urban Background Soil Concentration of 0.58 mg/kg or VOC concentrations exceed their respective Residential VSS (and therefore require disposal at a landfill), VHB will instruct the laboratory to analyze the samples for the following waste characterization analyses required by landfills:

- PCBs via EPA Method 8082A
- RCRA 8 Metals via EPA Method 6010D
- Total petroleum hydrocarbons ("TPH") by EPA Method 8015C
- Ignitibility by EPA Method 1030
- Corrosivity by EPA Method 9045
- Reactivity of cyanide/sulfide by EPA Methods 7.3.3.2/7.3.4.2
- Pesticides by EPA Method 8081B
- Herbicides by EPA Method 8151A
- Confirmatory TCLP analysis by EPA extraction method 1311 is required for analytes with a total analytical result that exceeds its TCLP Regulatory Level by 20 times.

Should the SVOC analytical results suggest that PAH concentrations <u>do not exceed</u> the Urban Background Soil Concentration of 0.58 mg/kg, and VOC concentrations <u>do not exceed</u> their respective Residential VSS, no further laboratory analysis will be requested, and the stockpiled soils will be reused offsite within an Urban Background Area, as discussed in Section 4.3.

4

Construction Soil and Groundwater Management Plan

4.1 General Construction Procedures

The following sections include general construction procedures for preconstruction notification, construction monitoring, soil management, groundwater management (if necessary), and Erosion Prevention and Sediment Control ("EPSC") measures. Areas of active construction within the Project Area shall be cordoned off from the public with demarcation taping and signage, by the Contractor. The Contractor is responsible for Project area security and safety, including controlling unauthorized access to the Project Area.

4.1.1 Preconstruction Preparation

The DEC has been notified prior to the commencement of construction activities involving soil excavation and management. The primary DEC Waste Management and Prevention Division ("WMPD") contact is:

Grahame Bradley
Grahame.Bradley@vermont.gov
802-622-4129

4.1.2 Contaminated Soil Handling Monitoring and Documentation

Due to the potential for contaminant concentrations to exceed the applicable standards in Site soil, an EP, as defined in the IRule, with current Occupational Safety and Health Administration ("OSHA") Hazardous Waste Operations and Emergency Response ("HAZWOPER") training shall be on-call to monitor work related to excavation and handling of contaminated soil and other potentially contaminated Project soil, and to document compliance with this SMP. The EP shall be retained by

BED. On-site observation is not required during excavation and handling of soil unless contingency measures are encountered (Section 4.6) or groundwater management is required (Section 4.5). At a minimum, a Site visit is required by the EP to perform excess stockpile characterization sampling (Section 3.2) and confirm that the isolation barriers have been restored in kind (compliant with the LEE CAP) following Project completion.

The Contractor shall be responsible for oversight and direction of their employees to perform work in accordance with this SMP and the Contractor's Health and Safety Plan. The Contractor is responsible for notifying workers of potential risks associated with contaminated materials, in accordance with the Hazard Communication Standard, 29 CFR 1910.1200.

4.1.3 Contaminated Soil Trucking Procedures

If off-site trucking of contaminated soil is required for Project construction, such as for temporary off-site stockpiling (not anticipated), or off-site disposal as described in Section 4.2, this activity shall be managed as follows:

- Control dust on and near soil excavation and loading locations (see Section 4.1.5).
- Utilize trucks with functional tailgate latches that are secured during transport.
- Prior to departure from the Project area, and during transport, the load shall be securely covered in a manner that prevents fugitive dust or other release of materials during transport.
- Trucks shall not track soil on their tires away from the excavation area or Site, including onto existing roadways.
- No liquid shall flow or drip from trucks during transport.

4.1.4 Erosion Prevention and Sediment Control

Erosion Prevention and Sediment Control ("EPSC") measures and inspections shall be conducted in accordance with applicable State and local construction stormwater discharge permit requirements and shall be the responsibility of the Contractor. EPSC measures are expected to be minimal based on the fact that the majority of the Project will be accomplished through directional drilling underground. The EPSC measures shall include, at a minimum, the following:

Prior to construction and excavation activities, appropriate sediment control measures shall be placed along the downslope side of areas where there is a potential for soil erosion and/or sediment runoff. Inlet protection measures shall be installed on stormwater infrastructure with the potential to receive sediment laden water from construction activities. In advance of forecasted rainfall or precipitation, EPSC measures that are in areas of active earth disturbance shall be inspected by the Contractor and repaired or augmented, as needed.

If stormwater runoff is identified downgradient of the construction site or runs off to stormwater infrastructure or receiving waters, the Contractor shall stop work and take immediate action to correct the discharge, including maintaining existing EPSC measures and installing supplemental EPSC measures. Diversionary measures may be used to intercept runoff from upgradient of the construction area and direct it around the disturbed area.

Stabilized construction entrances shall be installed and regularly maintained, in accordance with Project plan specifications, and at the direction of the resident engineer, to prevent equipment and vehicles from tracking soil off-site and/or onto public roads or sidewalks. If contaminated soil is tracked off-site and/or onto public roads or sidewalks, it shall immediately be collected and managed appropriately.

4.1.5 Dust Monitoring and Control

The excavation of soil has the potential to generate dust that could be a potential health hazard to workers and/or the public. Therefore, during excavation activities, the Contractor shall visually evaluate the Project Area for fugitive dust and employ dust suppression techniques as needed to minimize visible dust and mitigate the risk. Additionally, the Contractor is responsible for proactively monitoring weather forecasts and preparing dust suppression measures accordingly to avoid the generation of fugitive dust.

If fugitive dust is observed by the EP, contractor, or resident engineer, the Contractor shall stop work and take immediate action to mitigate the circumstances creating the fugitive dust, including, but not limited to, application of water.

4.2 Off-Site Soil Disposal at a Landfill

Should the analytical results from the excess soil stockpile suggest that PAH concentrations exceed the Urban Background Soil Concentration of 0.58 mg/kg or VOC concentrations exceed their respective Residential VSS, the stockpiled soils will need to be disposed of at a certified landfill. Described in Section 3.2, the stockpiled soil would then be analyzed for the remainder of the waste characterization analyses required by landfills.

The EP will support the Contractor with the preparation of a special waste profile for review and approval by the landfill to facilitate disposal of the stockpiled soil. It is likely that the soil would be categorized as alternative daily cover, as all soils disposed of during CAP redevelopment activities were categorized as such (LEE, 2024). However, categorization of the soils to be disposed of is fully dependent on the results of the stockpile waste characterization results.

On-road haul trucks will be loaded with the stockpiled soil on Site with observation provided by the Contractor. The Contractor will provide photo-documentation to the EP to memorialize the completion of the stockpile load out. Manifests, weigh slips, and truck inspection logs will be required to be tracked by the Contractor and provided to the EP for inclusion in the SMP Completion Report (see Section 6).

4.3 Off-Site Soil Reuse in an Urban Area

Should the analytical results from the excess soil stockpile suggest that PAH concentrations do not exceed the Urban Background Soil Concentration of 0.58 mg/kg, and VOC concentrations do not exceed their respective Residential VSS, the stockpiled soils will be reused offsite within an Urban Background Area. This soil is not regulated by DEC as long as it remains in an Urban Area as defined

by the ANR Natural Resources Atlas, proposed and confirmed by the Contractor. Prior to relocation of any soil offsite, DEC should be notified and approve of said relocation.

Number of truckloads, approximate truckload volume, and the location where the material was taken will be tracked and documented by the Contractor for the relocation of this soil outside of the Site.

4.4 Isolation Barrier Requirements

Soil that is either re-used within the Project area or left in place at depth shall be covered with an isolation barrier to mitigate the risk of direct human contact with the contaminated soil. Existing isolation barriers should be restored in kind to the specifications described in Section 2.2.4 of the LEE CACCR: a permeable isolation barrier of 9 inches of clean soil with geotextile fabric across the majority of the grassy Project area (Area ID "I"), and an impermeable isolation barrier of 6-inch thick concrete sidewalk over 8 inches of gravel subbase over geotextile fabric where the EV chargers are located (Area ID "A"). Geotextile fabric will serve as an indicator layer between clean and contaminated soils, as defined by the CAP.

The EP shall record the type(s) of Isolation Barrier re-installed as well as the spatial extent of those Isolation Barriers and contaminated soil that remains below on-Site Isolation Barriers, with sub-meter accuracy GPS, for inclusion in the SMP Completion Report.

4.5 Groundwater Management

Shallow groundwater is not anticipated within the Project extent and dewatering is not anticipated to be necessary for Project construction. Depth to water measured on July 1, 2021 in groundwater monitoring wells located in the western Project area ranged from 4.52 to 5.55 feet below top of well casing (that is generally situated a few inches below grade). The maximum anticipated depth of excavation during the Project is 39 inches below grade (3.25 feet).

Naphthalene in shallow groundwater above VGES has been identified in the western portion of the Project area, along the northern Site boundary. If dewatering is required within the area of known impacted groundwater identified in the map provided as **Appendix C**, the Contractor shall containerize dewatered effluent (e.g. fractionation tank) and the effluent shall be sampled to determine appropriate management. Additionally, should dewatering occur within this area, DEC shall be notified prior to sampling. Should dewatering be required outside the area of known impacted groundwater (identified in **Appendix C)**, this water shall be allowed to infiltrate to the point of origin. If dewatering is required outside of the area of known impacted groundwater, the Contractor shall only containerize dewatering effluent in a fractionation tank as outlined above if a sheen or petroleum odor is noted.

4.6 Contingency Measures

Previously unidentified contaminated media may be encountered during Project construction activities.

If unexpected evidence of soil contamination is encountered via visual and/or olfactory observations, the Contractor shall immediately notify the EP who shall immediately notify the DEC Site Manager.

In the event the Project contact cannot be reached within the workday when contamination is identified, the contamination discovery will be reported to WMPD Spills Hotline:

Vermont WMPD Spills Hotline:	1-800-641-5505 1-802-828-1138

If unexpected potentially contaminated soil is encountered within the Project Area as identified by visual and/or olfactory observation, this material will be excavated only to the extent necessary for Project construction. In reference to this SMP, the excavated material shall be handled separately from other categories of Project soil, temporarily stockpiled within the Project Area, and completely poly-encapsulated per the specifications in Section 3.1 of this document. The EP will notify DEC and determine an appropriate plan for further characterization (if required) and management.

5

Project Contacts and Schedule

Team members for the Project are identified in the following table:

Entity	Personnel	Contact Information
DEC	Grahame Bradley Site Manager	Grahame.Bradley@vermont.gov (802) 622-4129
BED	Michael Flora Director of Safety & Environmental	mflora@burlingtonelectric.com (802) 338-6550
VHB (Environmental Professionals)	Kurt Muller	kmuller@vhb.com 802-778-1278
	Haley Grigel	hgrigel@vhb.com 802-391-5565
(General Contractor)	TBD – Following Bid and Contract Award Process	

Initial construction phases and related soil management activities are anticipated to commence in May 2026 with completion of Project civil and electrical work by July 2026.

6

Completion Reporting

Following construction completion, the EP will prepare a SMP Completion Report documenting soil management practices implemented during construction were in accordance with this SMP. The SMP Completion Report will also memorialize the restoration of the soil cap isolation barrier on Site. This will require an on-Site inspection by the EP to confirm the isolation barrier has been reestablished.

The report shall include:

- Description of work performed.
- Description of minor deviations (if any) and justification for deviations.
- If applicable, manifests, weigh slips, and truck inspection logs for soil disposal at a landfill.
- Site plans reflecting post-SMP implementation Site conditions, including locations of installed isolation barriers.
- Field notes.
- Photographic documentation of final conditions at the Site.
- Analytical laboratory data.
- Certification that Project construction activities were performed in accordance with the SMP.

7

References

ANR, 2004. State of Vermont Agency of Natural Resources. *Grant of Environmental Restrictions and Right of Access – 405 Pine Street.* June 11, 2004.

DEC, 2024. Vermont Department of Environmental Conservation. *Investigation and Remediation of Contaminated Properties Rule. Environmental Protection Rules Chapter 35*. Effective February 23, 2024.

DEC, 2026. Vermont Department of Environmental Conservation. *Certificate of Completion; Applicant: Burlington City Arts Foundation SMS #20194876*. Signed January 7, 2026.

LEE, 2019. LE Environmental LLC. *Brownfields Phase II Environmental Site Assessment Report – 405 Pine Street, Burlington, Vermont*. November 15, 2019, updated December 20, 2019.

LEE, 2021. LE Environmental LLC. *Corrective Action Plan – 405 Pine Street, Burlington, Vermont (DEC Site #2019-4876)*. February 24, 2021, revised May 5, 2021.

LEE, 2022. LE Environmental LLC. *Corrective Action Plan Amendment – 405 Pine Street, Burlington, Vermont (DEC Site #2019-4876)*. April 4, 2022.

LEE, 2024. LE Environmental LLC. *Brownfields Corrective Action Construction Completion Report – Burlington City Arts Studios, 405 Pine Street, Burlington, Vermont (DEC Site #2019-4876)*. July 12, 2024.

Appendix A – LE Environmental Figures

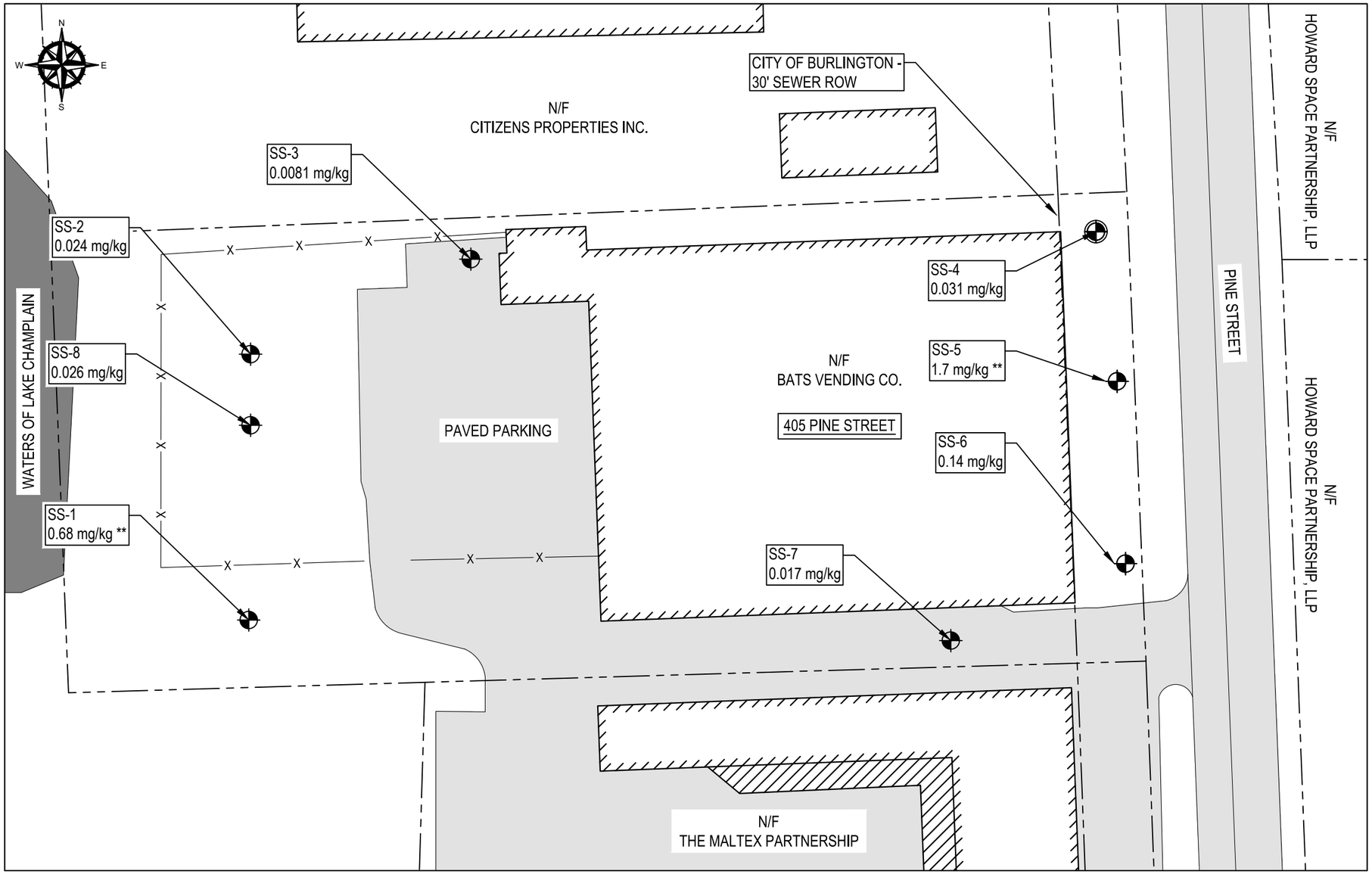

Soil Contaminant Map-PAH TEQ

SCALE: 1"=50'

NOTES:
SS = Soil sample location
Callout box shows PAH TEQ concentration
** = exeeds statewide urban background 0.58 mg/kg

MAPS CREATED USING IMAGERY FROM VERMONT CENTER FOR GEOGRAPHIC INFORMATION, AND DRAWINGS FROM CITY OF BURLINGTON.

GRAPHIC SCALE

50 0 25 50 100

LEGEND

- UTILITY POWER POLE
- SB-xx SOIL BORING (18)
- MW-xx GROUNDWATER MONITORING WELL (5)
- EXISTING BUILDING
- TREELINE
- FENCE
- CONTOUR
- PROPERTY LINE
- RIGHT-OF-WAY LINE
- EDGE OF PAVEMENT

1438 SOUTH BROWNELL ROAD
WILLISTON, VERMONT 05495
PHONE: (802)862-5590
FAX: (802)862-7598
GREEN MOUNTAIN ENGINEERING
CIVIL WATER WASTEWATER

LE·Environmental

DRAWING TITLE: PHASE II ESA SOILS SITE MAP

PROJECT: 405 PINE STREET

CLIENT: 405 PINE STREET BURLINGTON, VT

DESIGNED LEE / AL	PROJECT NO. 25-005.17
DRAWN BPC	
CHECKED BY AH	
PLOT DATE 11/12/19	MAP NO. 3
SCALE NONE	
DATE NOV. 2019	

FILE: S:\GME PROJECT FILES\25-000\25-005 LE ENVIRONMENTAL\25-005.17 405 PINE STREET\DRAWINGS\405 PINE STREET.DWG

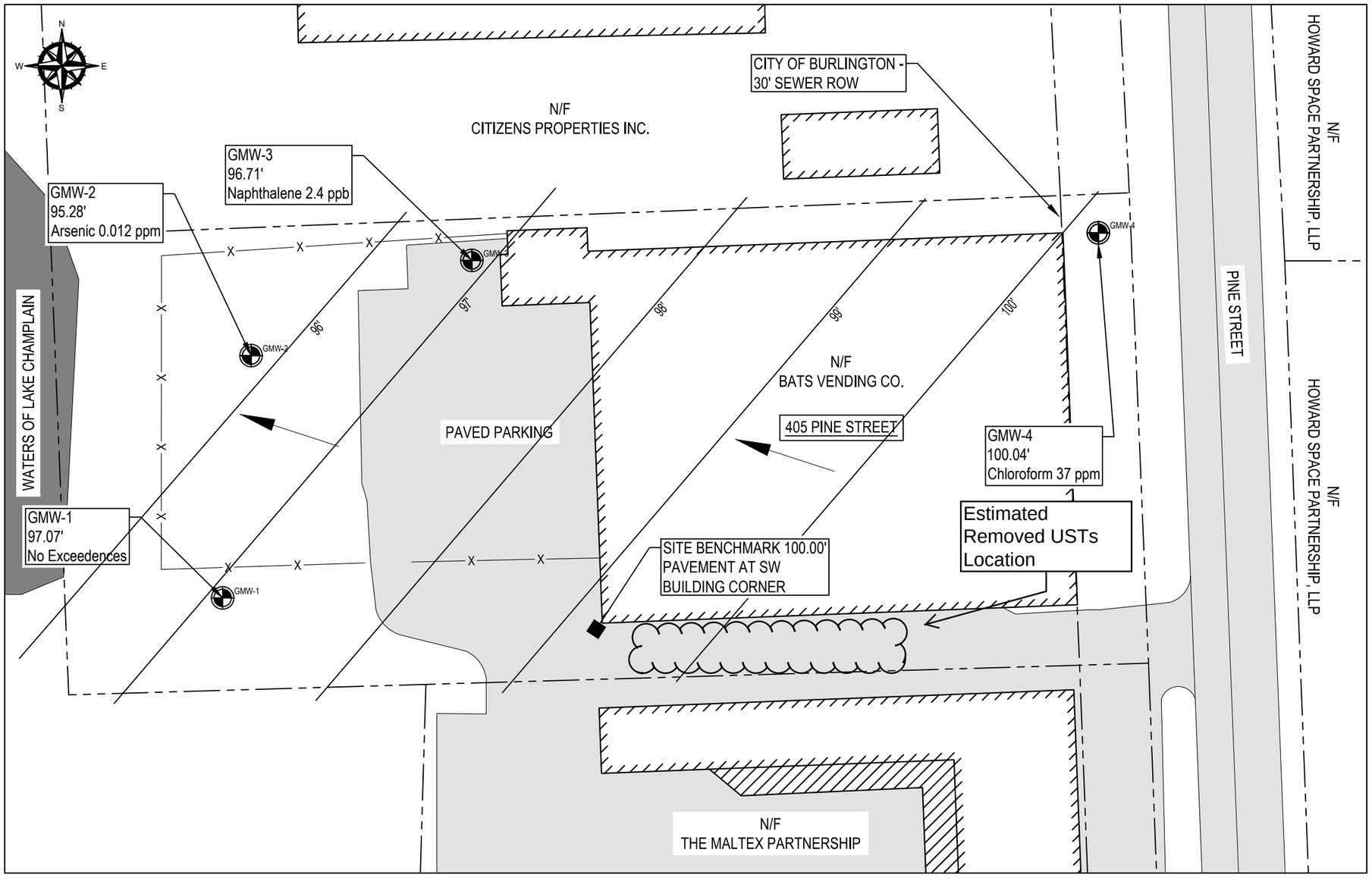

LEGEND

- UTILITY POWER POLE
- SB-xx — SOIL BORING (18)
- MW-xx — GROUNDWATER MONITORING WELL (5)
- EXISTING BUILDING
- TREELINE
- X — FENCE
- 100 — GW CONTOUR
- CONTOUR
- PROPERTY LINE
- RIGHT-OF-WAY LINE
- EDGE OF PAVEMENT

NOTES:
SB = soil boring
GMW = Groundwater monitoring well
100.04' = water table relative to BM
LE Environmental measure/sample date 9/18/19

MAPS CREATED USING IMAGERY FROM VERMONT CENTER FOR GEOGRAPHIC INFORMATION, AND DRAWINGS FROM CITY OF BURLINGTON.

GROUNDWATER CONTOUR AND EXCEEDENCE MAP

SCALE: 1"=50'

GRAPHIC SCALE

50 0 25 50 100

1438 SOUTH BROWNELL ROAD
WILLISTON, VERMONT 05495
PHONE: (802)862-5590
FAX: (802)862-7598
GREEN MOUNTAIN ENGINEERING
CIVIL WATER WASTEWATER

LE·Environmental

DRAWING TITLE	GROUNDWATER CONTOURS SITE MAP
PROJECT	405 PINE STREET
CLIENT	405 PINE STREET BURLINGTON, VT
DESIGNED	LEE / AL
DRAWN	BPC
CHECKED BY	AH
PLOT DATE	11/12/19
SCALE	NONE
DATE	NOV. 2019
PROJECT NO.	25-005.17
MAP NO.	2

FILE: S:\GME PROJECT FILES\25-000\25-005 LE ENVIRONMENTAL\25-005.17 405 PINE STREET\DRAWINGS\405 PINE STREET.DWG

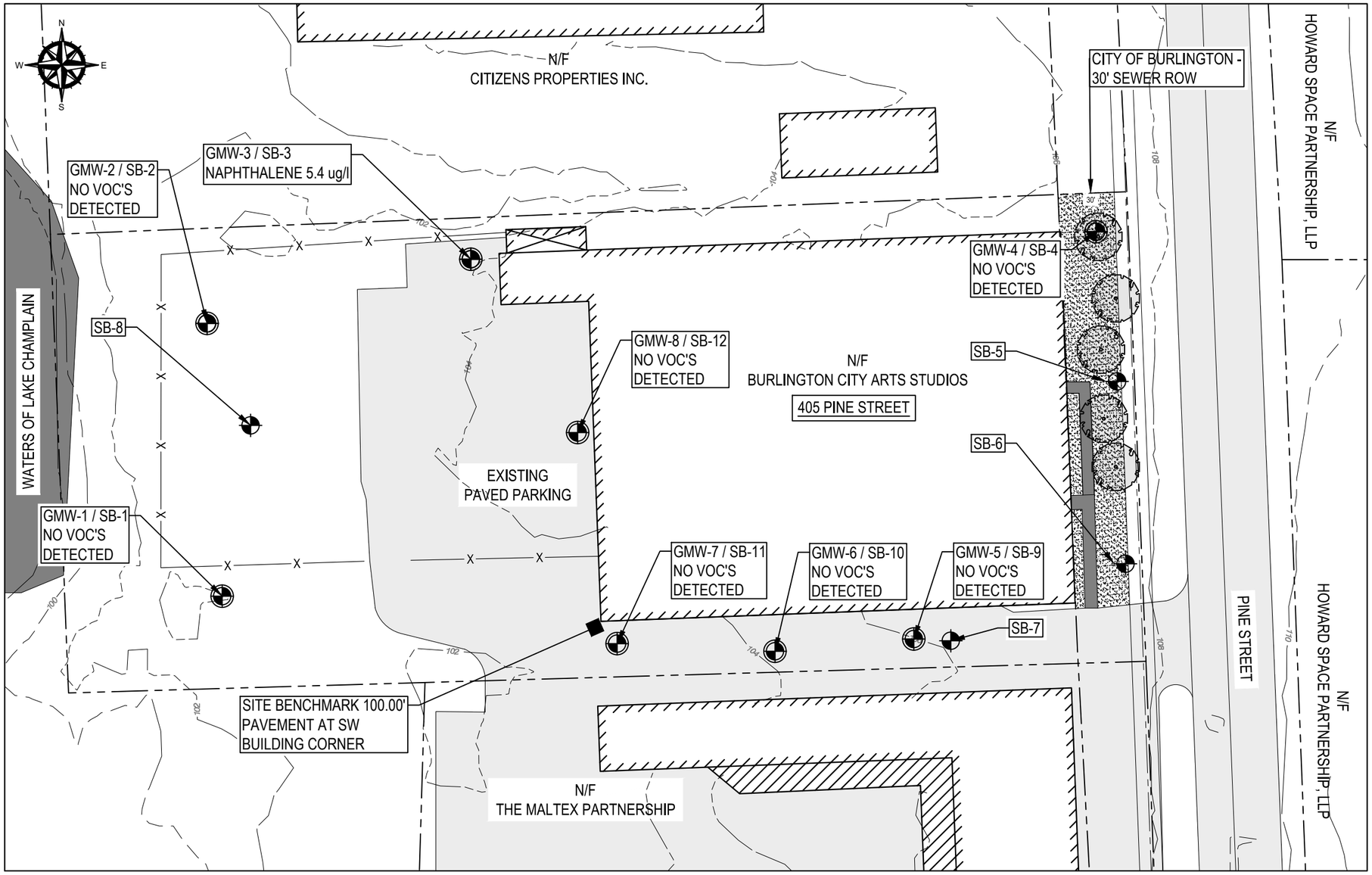

LEGEND

- UTILITY POWER POLE
- SB-xx — SOIL BORING (18)
- MW-xx — GROUNDWATER MONITORING WELL (5)
- EXISTING BUILDING
- TREELINE
- FENCE
- SURFACE CONTOUR
- PROPERTY LINE
- RIGHT-OF-WAY LINE
- EDGE OF PAVEMENT

NOTES:

Sampled 10/29/20 EPA M8260c

Call out boxes with groundwater volatile organic compound concentrations (VOCs) exceeding Vermont Groundwater Enforcement Standards (VGES)

MAPS CREATED USING IMAGERY FROM VERMONT CENTER FOR GEOGRAPHIC INFORMATION, AND DRAWINGS FROM CITY OF BURLINGTON.

GROUNDWATER CONTAMINATION MAP

SCALE: 1"=50'

GRAPHIC SCALE

50 0 25 50 100

1438 SOUTH BROWNELL ROAD
WILLISTON, VERMONT 05495
PHONE: (802)862-5590
FAX: (802)862-7598

GREEN MOUNTAIN ENGINEERING
CIVIL WATER WASTEWATER

LE·Environmental

DRAWING TITLE: GROUNDWATER CONTAMINATION MAP
LEE SAMPLING DATE OCTOBER 29, 2020

PROJECT: 405 PINE STREET

CLIENT: 405 PINE STREET
BURLINGTON, VT

DESIGNED LEE / AL	PROJECT NO. 25-005.17
DRAWN BPC	
CHECKED BY AH	
PLOT DATE 11/6/20	MAP NO. 3
SCALE NONE	
DATE NOV. 2020	

FILE: S:\GME PROJECT FILES\25-000\25-005 LE ENVIRONMENTAL\25-005.17 405 PINE STREET\DRAWINGS\405 PINE STREET.DWG

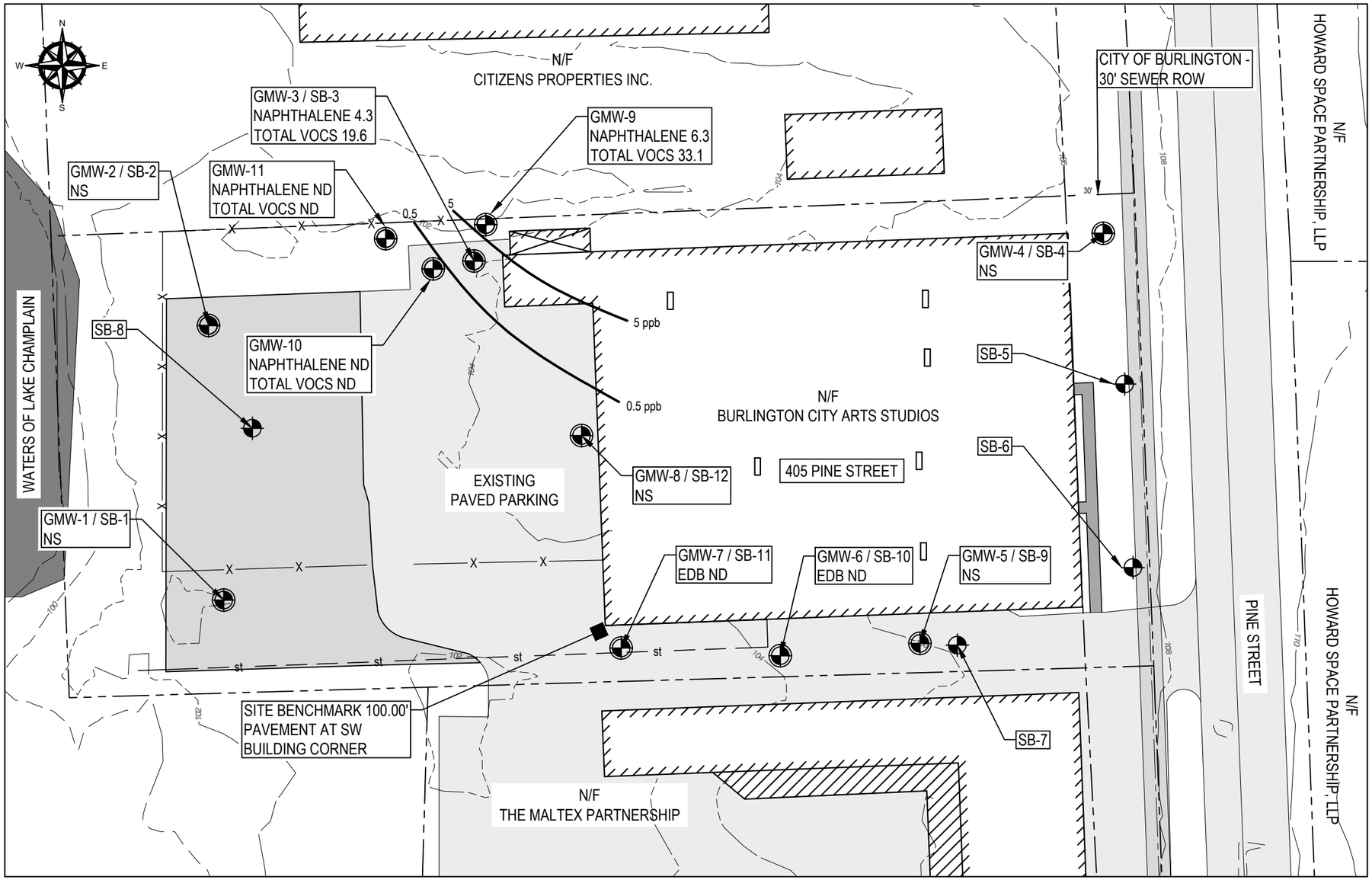

NAPHTHALENE DISTRIBUTION MAP (JULY 1,2021 SAMPLES)

SCALE: 1"=50'

NOTES:
SB = soil boring
GMW = Groundwater monitoring well

MAPS CREATED USING IMAGERY FROM VERMONT CENTER FOR GEOGRAPHIC INFORMATION, AND DRAWINGS FROM CITY OF BURLINGTON.

GRAPHIC SCALE

50 0 25 50 100

NOTES:

CALL OUT BOXES CONTAIN CALCULATED GROUNDWATER LEVEL ELEVATIONS BASED ON WATER LEVEL MEASUREMENTS COLLECTED ON JULY 1, 2021.

NM = NOT MEASURED

LEGEND

- UTILITY POWER POLE
- SB-xx — SOIL BORING (18)
- MW-xx — GROUNDWATER MONITORING WELL (5)
- EXISTING BUILDING
- TREELINE
- FENCE
- SURFACE CONTOUR
- PROPERTY LINE
- RIGHT-OF-WAY LINE
- EDGE OF PAVEMENT

1438 SOUTH BROWNELL ROAD
WILLISTON, VERMONT 05495
PHONE: (802)862-5590
FAX: (802)862-7598
GREEN MOUNTAIN ENGINEERING
CIVIL WATER WASTEWATER

LE·Environmental

DRAWING TITLE	NAPHTHALENE DISTRIBUTION MAP
PROJECT	405 PINE STREET
CLIENT	405 PINE STREET BURLINGTON, VT
DESIGNED	LEE / AL
DRAWN	BPC
CHECKED BY	AH
PLOT DATE	7/19/21
SCALE	NONE
DATE	JUL. 2021
PROJECT NO.	25-005.17
EXHIBIT NO.	4

FILE: S:\GME PROJECT FILES\25-000\25-005 LE ENVIRONMENTAL\25-005.24 BURLINGTON CITY ARTS - TSI REPORT\DRAWINGS\BURLINGTON CITY ARTS.DWG

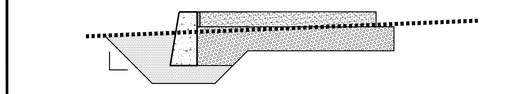

CONCRETE SIDEWALK SECTION 'A'
N.T.S.

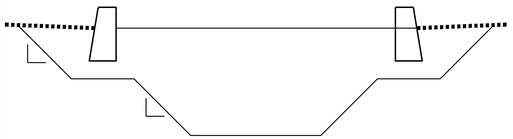

PARKING LOT ISLANDS W/ TREES 'B'
N.T.S.

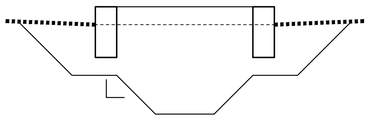

TREE WELLS 'C'
SIMILAR FOR TREE IN LAWN N.T.S.

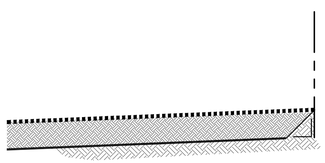

EXPOSED SOIL (LAWN AND PLANTERS) 'I'
N.T.S.

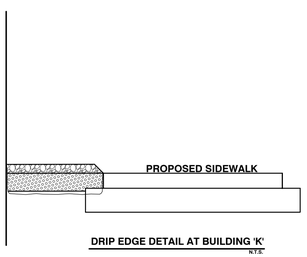

PROPOSED SIDEWALK

DRIP EDGE DETAIL AT BUILDING 'K'
N.T.S.

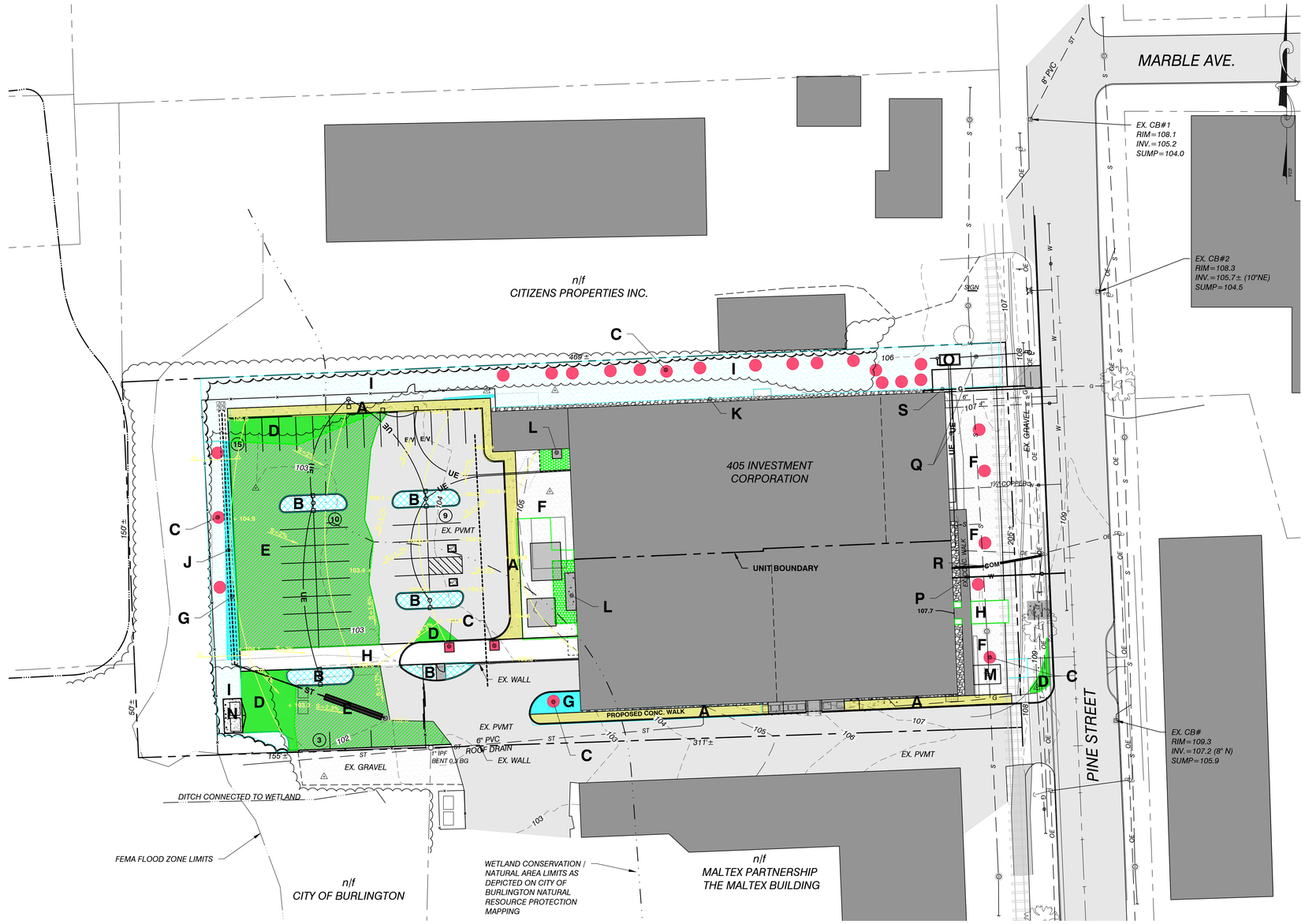

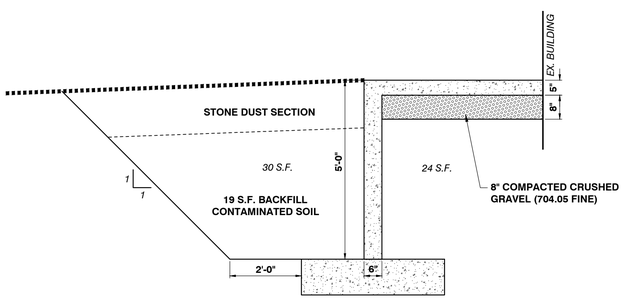

EGRESS DOOR PAD W/ FROST WALL 'L'
N.T.S.

Area ID			Section		number	C.Y.	Description
A	510	LF	20	S.F.		378	New sidewalk section
B	18	LF	25	S.F.	5	83	Tree islands
C	5	LF	15	S.F.	25	69	5'x5' Tree Well & Tree in lawn area
			Depth				
D	2060	SF	1.5	18" DEEP		114	New pavement full depth
E	10080	SF	0.17	2" DEEP		63	New pavement at ex. Gravel
F	5262	SF	0.75	9" Deep		146	Stone dust area
G	245	SF	0.75	9" Deep		7	Gravel or Pavement to lawn
H	265	SF	1.5	18" Deep		15	Permeable pavers
I	9430	SF	0.75	9" Deep		262	Exposed soil to Lawn / Planter
J	612	SF	0.75	9" Deep		17	Rain Garden
K	1090	SF	0.75	9" Deep		30	Stone drip edge
L	30	LF	24	SF	2	53	Egress door w/ 5' frost wall
	71.1	LF	30	S.F.		79	1:1 Excavation for pad
M	150	SF	1.5	18" Deep		8	Concrete Pad
N	200	SF	1.17	14" Deep		9	Dumpster Pad and subbase (18.5'x10')
	4	SF	4.5	4'-6" Deep	4	1	Dumpster footings (4 total)
O	11	LF	72	SF		29	K30.3 transformer Vault
P	50	LF	16.2	SF		30	Water Service Trench 6' X 2.17'
Q	145	LF	6.7	SF		36	Elec. Service Trench 3.3' X 2'
R	47	LF	6	SF		10	Communication Conduit 3' X 2'
S	58	LF	6	SF		13	Gas Trench 3' X 2'
					Total area	1,454	cubic yards

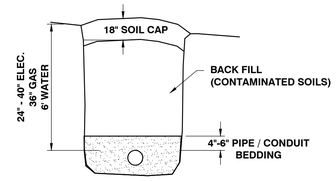

UTILITY TRENCH DETAIL
N.T.S.

AREA OF BACK FILL			Section		C.Y.	Description
L	71.1	LF	19	S.F.	50	1:1 Excation for pad - Stone dust section
P	50	LF	8.68	SF	16	Water Service Trench 4' (6'-6" bedding-18" cap) X 2.17'
Q	251	LF	2.9	SF	27	Elec. Service Trench 1.47' (3.3'-4" sand-18" cap) X 2'
R	47	LF	2.8	SF	5	Communication Conduit 1.4' (3'-18" cap-4" sand) X 2'
S	58	LF	2	SF	4	Gas Trench 1' (3'-18" cap-6" sand) X 2'

Total back fill	102	cubic yards
Total soil to be removed	1,352	cubic yards

GRAPHIC SCALE
30 0 15 30 60 120
(IN FEET)
1 inch = 30 ft.

SITE ENGINEER:

CIVIL ENGINEERING ASSOCIATES, INC.
10 MANSFIELD VIEW LANE, SOUTH BURLINGTON, VT 05403
P: 802-864-2323 FAX: 802-864-2271 web: www.cea-vt.com

COPYRIGHT © 2021 – ALL RIGHTS RESERVED

DRAWN
MAB
CHECKED
DSM
APPROVED
DSM

CLIENT:

405 INVESTMENT CORPORATION

135 CHURCH STREET
BURLINGTON, VT 05401

PROJECT:

BURLINGTON CITY ARTS FOUNDATION, INC.

405 PINE STREET
BURLINGTON, VT

LOCATION MAP
1" = 2000'

DATE	CHECKED	REVISION
01/02/22	DSM	REVISED PER REVIEW COMMENTS
02/04/22	DSM	EGRESS DOORS / REMOVE GARAGE
08/30/22	DSM	UPDATE PER NEW LANDSCAPE PLAN
10/21/22	DSM	UPDATE PER PROPOSED REVISIONS
10/22/22	DSM	UPDATE SECTION 'L' AND BACKFILL CALC.
07/10/24	DSM	UPDATED AREAS

PROPOSED CONDITIONS PLAN - SOIL REMOVAL

DATE
12/22/2021
SCALE
1" = 30'
PROJ. NO.
21212

DRAWING NUMBER
WS1

P:\AutoCAD\Projects\2021\21212-Tourcuillin\1-CADD Files\dwg\21212 - Site.dwg, 7/11/2024 9:25:06 AM, DWG To PDF.pc3

Appendix B – Project Plans (BED)

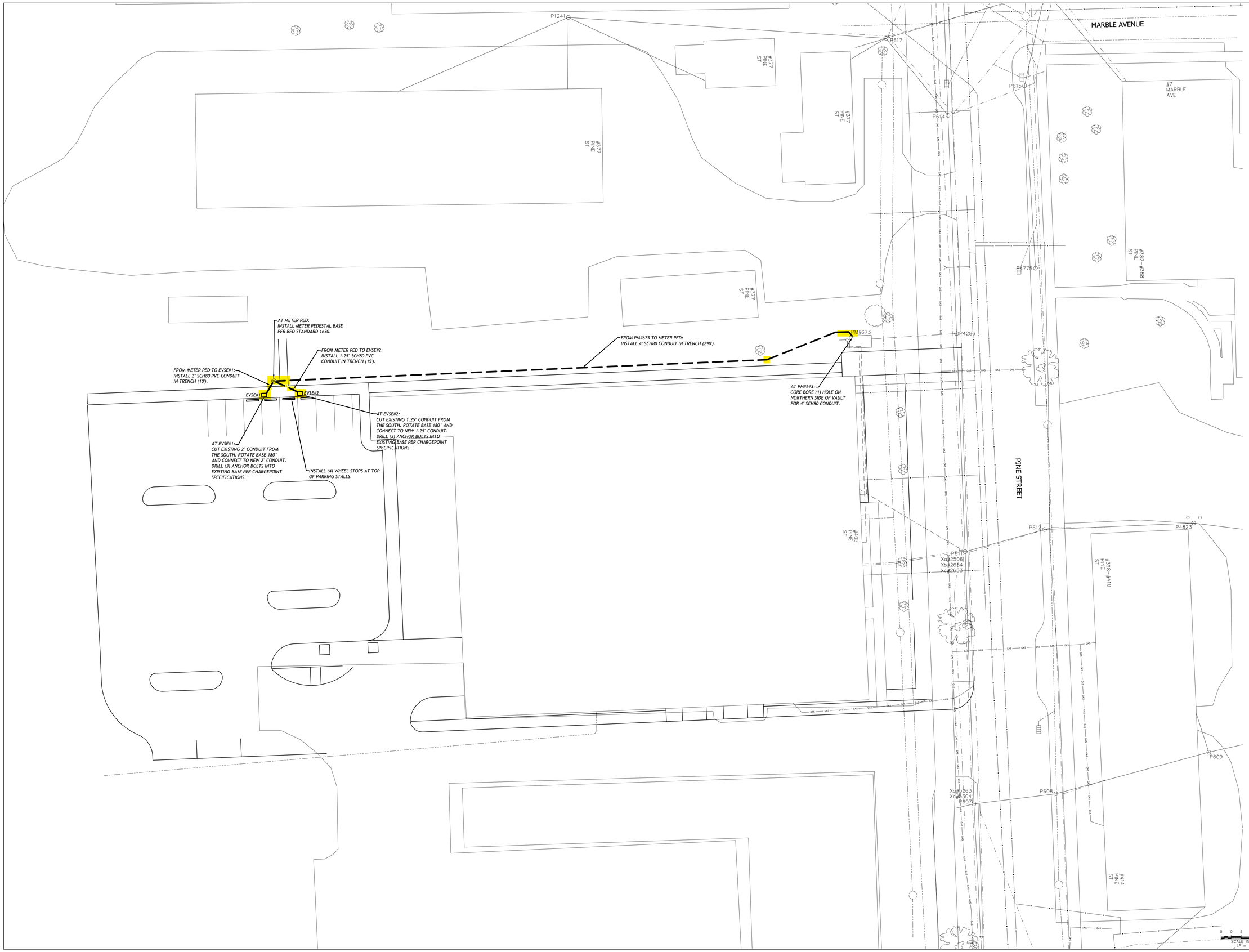

REV #	DRAWN BY:	PLOT DATE:	DESCRIPTION/APPROVAL/DATE

BURLINGTON ELECTRIC DEPARTMENT

BURLINGTON, VERMONT

#405 PINE STREET: LEVEL 2 EVSE CIVIL INSTALLATIONS

SCALE: 1" = 20'	DRN. BY: RG	DWG NO: D15080100
PLOT DATE: 03/11/25	APP. BY: SS	SHEET 1 OF 2

LEGEND

- APPROXIMATE PROPERTY LINE
- APPROXIMATE SETBACK LINE
- 100 — EXISTING CONTOUR
- EXISTING CURB
- EXISTING FENCE
- EXISTING GRAVEL
- EXISTING PAVEMENT
- EXISTING GUARD RAIL
- E — EXISTING ELECTRIC
- FM — EXISTING FORCEMAIN
- G — EXISTING GAS
- ST — EXISTING STORM
- S — EXISTING GRAVITY SEWER
- T — EXISTING TELEPHONE
- W — EXISTING WATER
- EXISTING SWALE
- STREAM
- WETLANDS
- WETLANDS BUFFER
- EXISTING SEWER MANHOLE
- EXISTING STORM MANHOLE
- EXISTING CATCH BASIN
- EXISTING YARD DRAIN
- EXISTING WELL
- EXISTING HYDRANT
- EXISTING SHUT OFF
- EXISTING UTILITY POLE
- EXISTING LIGHT POLE
- EXISTING GUY WIRE/POLE
- EXISTING SIGN
- EXISTING DECIDUOUS TREE
- EXISTING CONIFEROUS TREE
- EDGE OF BRUSH/WOODS
- IRON ROD/PIPE FOUND
- PROJECT BENCHMARK
- CONTROL POINT
- PROPOSED PAVEMENT
- UE — PROPOSED ELECTRIC
- G — PROPOSED GAS
- W — PROPOSED WATER
- COM — PROPOSED TELECOM CONDUIT
- ST — PROPOSED STORM
- PROPOSED CATCH BASIN
- PROPOSED LIGHT POLE
- PROPOSED EDGE OF BRUSH/WOODS

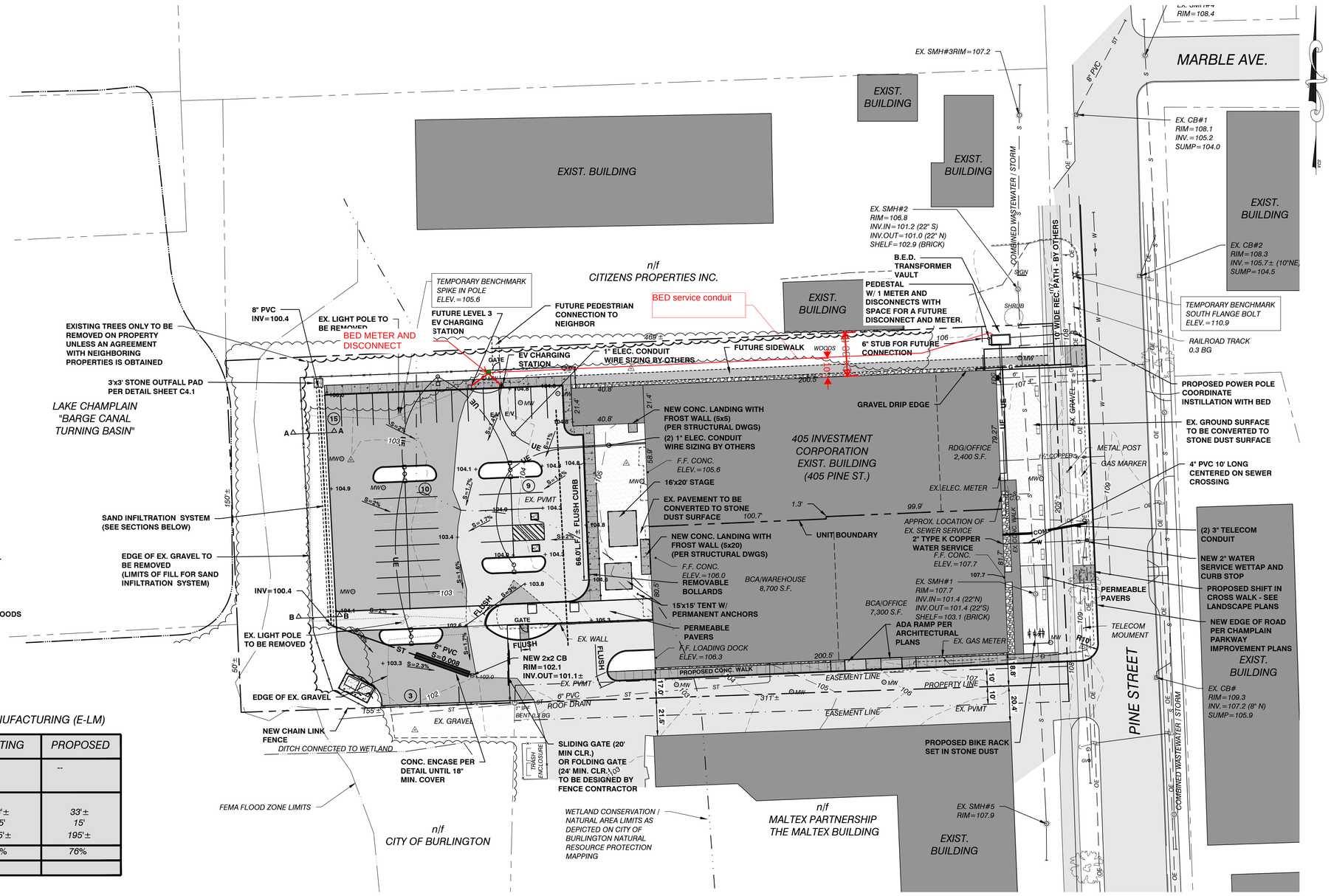

ZONING REQUIREMENTS:

ZONING DISTRICT: ENTERPRISE LIGHT MANUFACTURING (E-LM)

CATEGORY	ZONING	EXISTING	PROPOSED
MAX INTENSITY (FLOOR AREA RATIO)	2.0 FAR	--	--
SETBACK			
FRONT YARD	5' MIN	33'±	33'±
SIDE YARD	0'	15'	15'
REAR YARD	10% (20')	195'±	195'±
LOT COVERAGE	80%	71%	76%
MAX. HEIGHT	45'		

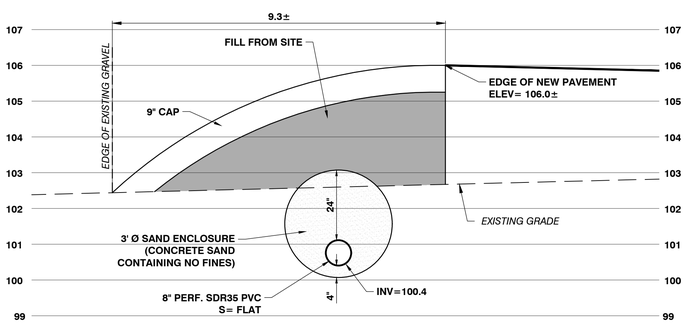

SECTION A-A

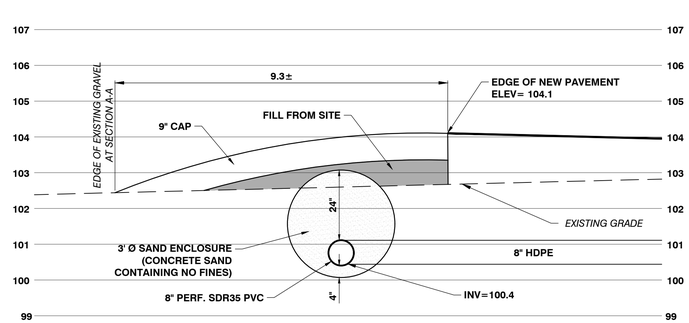

SECTION B-B

GRAPHIC SCALE

30 0 15 30 60 120

(IN FEET)
1 inch = 30 ft.

SITE ENGINEER:

CIVIL ENGINEERING ASSOCIATES, INC.
10 MANSFIELD VIEW LANE, SOUTH BURLINGTON, VT 05403
P: 802-864-2323 FAX: 802-864-2271 web: www.cea-vt.com

COPYRIGHT © 2022 – ALL RIGHTS RESERVED

DRAWN: MAB
CHECKED: DSM
APPROVED: DSM

CLIENT:

405 INVESTMENT CORPORATION

135 CHURCH STREET
BURLINGTON, VT 05401

PROJECT:

BURLINGTON CITY ARTS FOUNDATION, INC.

405 PINE STREET
BURLINGTON, VT

LOCATION MAP
1" = 2000'

DATE	CHECKED	REVISION

PROPOSED CONDITIONS PLAN

DATE: JAN. 2022
SCALE: 1" = 30'
PROJ. NO.: 21212
DRAWING NUMBER: C2.0

P:\AutoCAD\Projects\2021\21212-Tourcoulis\1-CADD Files\dwg\21212 - Site.dwg, 10/6/2023 1:21:03 PM, DWG To PDF.pc3

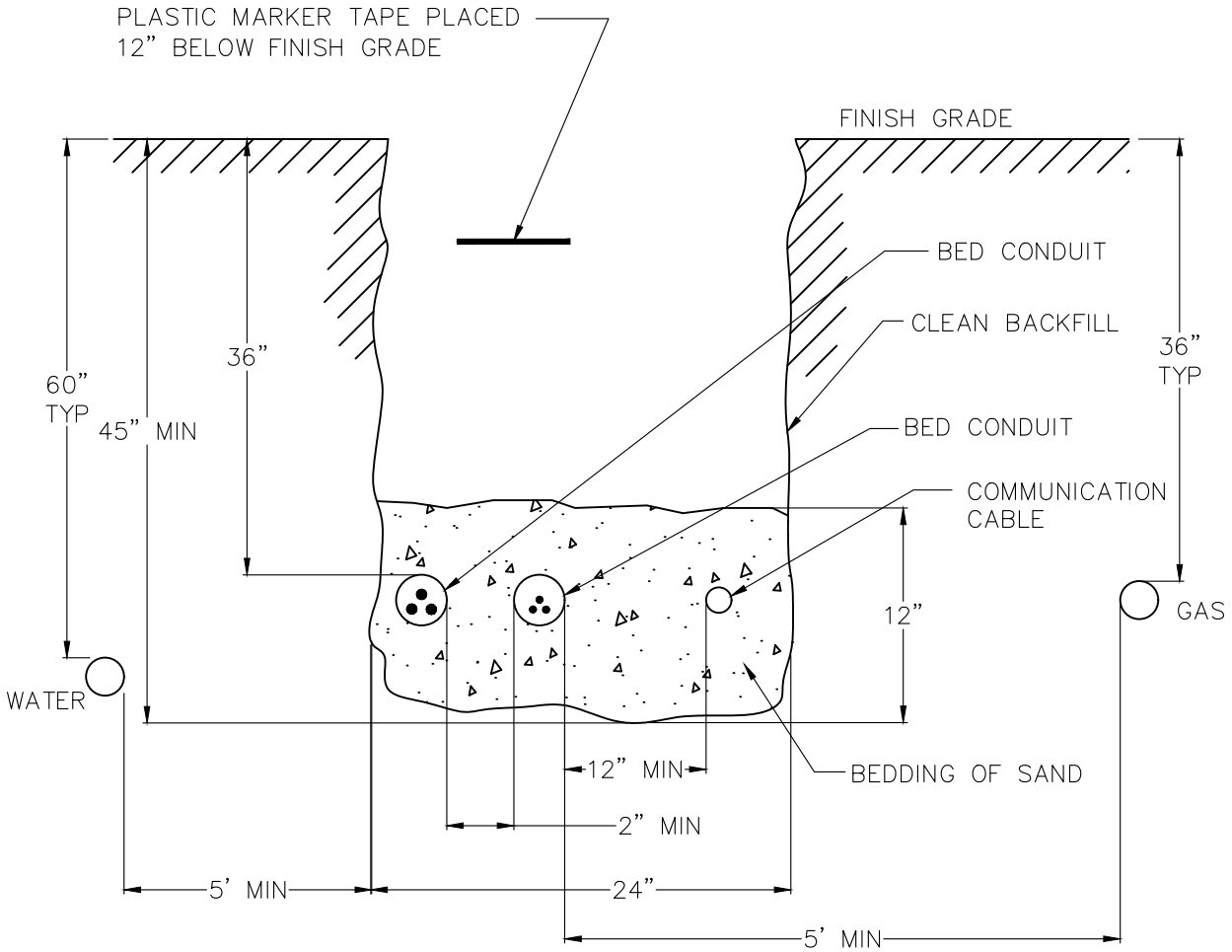

NOTES

1. CLEARANCE FROM OTHER UTILITIES (EXCEPT COMMUNICATIONS) IS TO BE 5' MINIMUM. FOR A REDUCED CLEARANCE, APPROVAL FROM ALL UTILITIES AFFECTED IS REQUIRED.
2. ALL CLEARANCES MUST ADHERE TO THE MOST RECENT NESC CODES.
3. MOUNDING THE TRENCH TO GAIN SUITABLE CABLE DEPTH IS NOT PERMITTED.
4. ALL CROSSINGS OF OTHER UTILITIES IN CONDUITS MUST BE A MINIMUM OF 12" APART AND BE PERPENDICULAR FROM EACH OTHER.

BURLINGTON ELECTRIC DEPT.	
DISTRIBUTION STANDARDS	
TRENCH CLEARANCES	
DATE: 06/24/19	DWG. NO.: 160401
DWN BY: RG	APP. BY:
SCALE: NONE	SHEET 1 OF 2

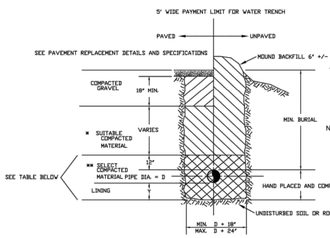

MINIMUM BURIAL DEPTH

(FINISH GRADE TO TOP OF PIPE)

GRAVITY PIPE - SEE PLAN OR PROFILE
PRESSURE PIPE BENEATH PAVING - 6'-0"
PRESSURE PIPE BENEATH UNPAVED AREAS - 5'-6"

NOTES
1. WHERE BACKFILL IS DESIGNATED "COMPACTED", THIS MEANS 90% TO 95% STANDARD PROCTOR, AASHTO T-99. ALL FILL PLACED BELOW PIPES AND STRUCTURES TO MEET THIS REQUIREMENT.
2. FOR ALL TRENCHES WITH A GRADE GREATER THAN 4% AND/OR WHERE GROUNDWATER IS APPARENT, INSTALL CLAY DAMS AROUND PIPE AT 100' INTERVALS.
2. INSTALL TRACER WIRE AND DETCTABLE TAPE PER NOTE 21 ON THIS SHEET.

TYPICAL TRENCH DETAIL

N.T.S.

Y - DIMENSION	CONDITION & PIPE	* * SELECT MATERIAL	LINING
0"	DUCTILE IRON PIPE IN "ORDINARY SOIL"	TYPE I II OR III	-
6"	ALL PIPE OVER BEDROCK OR LEDGE	TYPE II OR III	SAND OR TYPE III
4"	DUCTILE IRON PIPE IN CLAY OR MUCK	TYPE II OR III	SAND
6"	PLASTIC - ALL	SAND	SAND

* SUITABLE MATERIAL SHALL CONTAIN NO STONES GREATER THAN 4" IN DIAMETER, NO FROZEN LUMPS, AND ONLY MINOR AMOUNTS OF CLAY OR ORGANIC MATERIAL. ALL MATERIAL TO BE PLACED IN MAXIMUM OF 12" LIFTS AND COMPACTED BEFORE PLACING NEXT LIFT.

** TYPE I MATERIAL SHALL BE EITHER GRAVEL OR EXCAVATED MATERIAL CONTAINING NO STONES GREATER THAN 1 1/2" IN DIAMETER, NO FROZEN MATERIAL, NO CLAY, AND NO ORGANIC MATERIAL.

** TYPE II MATERIAL SHALL BE CLEAN, HARD, CRUSHED OR NATURAL STONE WITH A GRADATION BY WEIGHT OF 100% PASSING A 1 1/2" SQUARE OPENING, NOT MORE THAN 25% PASSING A 3/4" SQUARE OPENING, AND NOT MORE THAN 5% PASSING A 1/2" SQUARE OPENING.

** TYPE III MATERIAL SHALL BE CLEAN, HARD, CRUSHED STONE FREE FROM COATINGS AND THOROUGHLY WASHED WITH A GRADATION BY WEIGHT OF 100% PASSING A 1" SQUARE OPENING AND 0 TO 5% PASSING A 1/4" SQUARE OPENING.

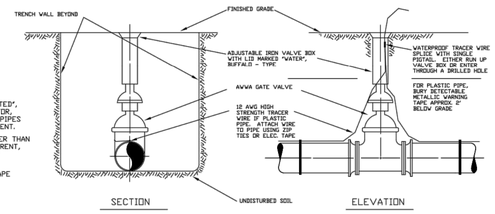

BURIED GATE VALVE DETAIL

N.T.S.

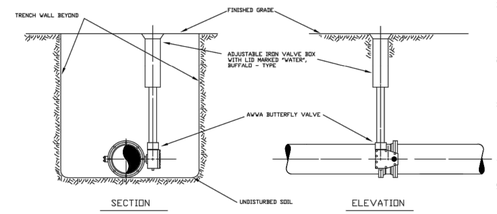

BURIED BUTTERFLY VALVE DETAIL

N.T.S.

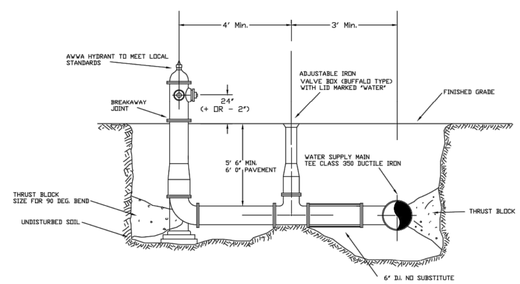

1 ALL HYDRANT DRAINS MUST BE PLUGGED SEE SPECIFICATION NO. 8

2 WHERE VALVE CANNOT BE RESTRAINED TO MAIN TEE, ANCHOR VALVE AS IN BURIED GATE VALVE DETAIL

3 USE MEGALUG RETAINER GLANDS FOR ALL CONNECTIONS

TYPICAL HYDRANT INSTALLATION

N.T.S.

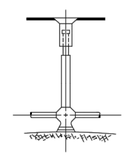

NOTES:
1. CONNECTIONS SHALL BE COMPRESSION FITTINGS FOR PLASTIC (CTS) WITH STAINLESS STEEL INSERT STIFFENERS REQUIRED.
2. EVERY NEW CURB BOX REQUIRES THE EXTENSION OF THE TRACER WIRE FROM THE WATER MAIN PER NOTE 21 ON THIS SHEET. TRACER WIRE SHALL FOLLOW THE SERVICE LINE TO THE CURB BOX. THE TRACER WIRE SHALL BE WOUND AROUND THE CURB BOX A MINIMUM OF 2 TIMES BELOW GRADE. AT APPROXIMATELY 1 FOOT BELOW GROUND SURFACE A 1" HOLE SHALL BE PLACED IN THE NEW CURB BOX AND THE TRACER WIRE SHALL BE EXTENDED INTO THE CURB BOX WITH APPROXIMATELY 12 OF EXCESS WIRE.

1" TO 2" CURB BOX

N.T.S.

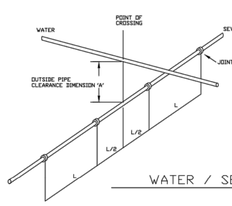

CONSTRUCTION RESTRICTIONS

1. IN ALL NEW CONSTRUCTION, DIMENSION 'X' SHALL NEVER BE LESS THAN 18 INCHES.
2. WITH ALL NEW CONSTRUCTION, THE CROSSING SHALL BE ARRANGED AS SHOWN IN THIS DIAGRAM, SO THAT THE SEWER JOINTS WILL BE EQUIDISTANT AND AS FAR AS POSSIBLE FROM THE WATER MAIN JOINTS.
3. IF THE WATER MAIN MUST PASS BENEATH THE SEWER IN NEW CONSTRUCTION, OR IT IS IMPOSSIBLE TO MAINTAIN THE 18 - INCH SEPERATION DUE TO EXISTING UTILITY (PREVIOUS CONSTRUCTION ONLY), THEN ADEQUATE STRUCTURAL SUPPORT SHALL BE PROVIDED FOR THE SEWER, PLUS THE WATER MAIN OR THE SEWER SHALL BE COMPLETELY ENCASED IN A SEAMLESS SLEEVE CONSISTING OF A FULL LENGTH OF PIPE, FULL LENGTH OF PIPE (e.g. SDR 35 PVC), CENTERED ON THE CROSSED UTILITY.

WATER / SEWER CROSSING DETAILS

N.T.S.

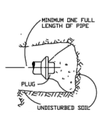

DEAD END
NTS

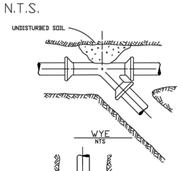

WYE
NTS

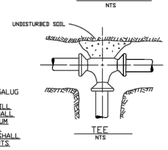

TEE
NTS

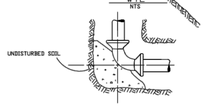

90, 45, 22.5, OR 11.25 DEG. BEND
NTS

NOTES:
1. ON ALL MECHANICAL JOINTS, USE MEGALUG RETAINER GLANDS.
2. POURED CONCRETE THRUST BLOCKS WILL NOT BE ALLOWED. THRUST BLOCK SHALL BE PRECAST CONCRETE WITH A MINIMUM COMPRESSION STRENGTH OF 3,000 PSI. PRECAST CONCRETE THRUST BLOCKS SHALL MEET THE SURFACE AREA REQUIREMENTS PRESENTED IN THE TABLE.

THRUST BLOCK DETAILS

N.T.S.

MINIMUM AREA OF BEARING SURFACE OF CONC. THRUST BLOCKS
(IN SQUARE FEET)

3"				4"				6"				8"				12"				SOIL CONDITION	SAFE BEARING LOAD (PSF)
ENDS & TEES	90° ELB.	45° ELB.	22.5° ELB.	ENDS & TEES	90° ELB.	45° ELB.	22.5° ELB.	ENDS & TEES	90° ELB.	45° ELB.	22.5° ELB.	ENDS & TEES	90° ELB.	45° ELB.	22.5° ELB.	ENDS & TEES	90° ELB.	45° ELB.	22.5° ELB.		
0.5	0.5	0.5	0.5	0.5	1.0	0.5	0.5	1.0	1.5	1.0	0.5	2.0	2.5	1.5	1.0	4.0	5.5	3.0	1.5	SQUAD SHALE	10,000
1.0	1.0	1.0	0.5	1.5	2.0	1.0	0.5	3.0	4.0	2.0	1.0	4.5	6.5	3.5	2.0	10.0	14.0	7.5	4.0	CEMENTED GRAVEL & SAND	4,000
1.0	1.5	1.0	0.5	2.0	2.5	1.5	1.0	3.5	5.0	3.0	1.5	6.0	8.5	5.0	2.5	13.0	18.5	10.0	5.0	COARSE & FINE COMPACT SAND	3,000
1.5	2.5	1.5	1.0	2.5	3.5	2.0	1.0	5.5	7.5	4.0	2.0	9.0	13.0	7.0	3.5	20.0	27.5	15.0	8.0	MEDIUM CLAY (CAN BE SPARED)	2,000
3.0	4.5	2.5	1.5	5.0	7.0	4.0	2.0	10.5	15.0	8.0	4.0	18.0	25.0	14.0	7.0	39.0	55.0	30.0	15.0	SOFT CLAY	1,000

MAXIMUM WATER PRESSURE = 300 PSI NOTE: REDUCER BEARING AREA = 45 DEG. BEND, LARGER PIPE

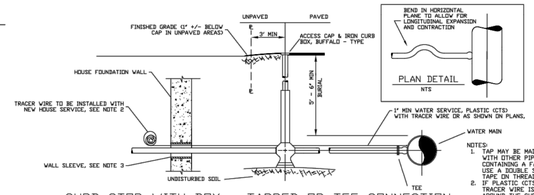

NOTES:
1. TAP MAY BE MADE DIRECTLY TO DUCTILE IRON PIPE WITH OTHER PIPE MATERIALS USE EITHER A COUPLING CONTAINING A FACTORY - TAPPED BRASS BUSHING OR USE A DOUBLE STRAP SERVICE CLAMP. USE TEFLON TAPE ON THREADS.
2. IF PLASTIC (CTS) PIPE IS USED FOR HOUSE SERVICE, TRACER WIRE IS TO BE INSTALLED FROM THE MAIN, THROUGH THE CURB STOP INTO THE HOUSE WITH 7' COIL OF ADDITIONAL TRACER WIRE INSIDE THE HOUSE.
3. WALL SLEEVE SHALL BE TWO (2) TIMES THE DIAMETER OF THE HOUSE SERVICE BEING INSTALLED.
4. IN THE EVENT THAT A HOUSE SERVICE IS NOT BEING INSTALLED FROM THE CUB STOP, THE CONNECTION SHALL BE SEALED FOR FUTURE INSTALLATION.

CURB STOP WITH BOX - TAPPED OR TEE CONNECTION

N.T.S.

NOTES:

Before construction of any utilities or improvements, the Contractor shall notify the Department of Public Works (DPW), IN WRITING, of intent to proceed.

1. All water mains, fittings, appurtenances and other materials, and construction shall conform to all applicable AWWA, State and City codes, standards and regulations. In the case of conflict between these construction details and specifications and a code or regulation, the decision of the Vernont Department of Health or VTDEC Water Supply shall be binding.
2. All water mains, fittings, appurtenances shall be installed in a workmanlike manner. Installation shall be under the general inspection of the Public Works Department. Before any water line work is commenced by the Contractor, they shall notify the Public Works Department at least five (5) work days in advance of his intention to proceed.
3. Connection to an existing water main shall be done under the supervision of, and with the approval of the Public Works Department. It is the Contractor's responsibility to secure ALL necessary permits and permission to make the connection and to coordinate all parties involved in the process. The Public Works Department shall be notified AT LEAST five (5) work days in advance of the intended connection time.
4. An inspector employed by the Public Works Department shall be notified at least two (2) days in advance of all water line installations. Said inspector shall be on the premises for all water line installations.
5. As-Builts prepared by the Contractor are required by the Public Works Department at the time of the completion of the water system. The contractor shall provide accurate tie sheets for all new valves, fittings and curb stops. The contractor shall allow the city to access the construction site to obtain additional infrastructure information throughout the project.
6. All water mains shall have horizontal and vertical distances as detailed on this drawing.
7. All public and private water mains: 1) 4" or greater shall be C-900 pipe (per note 21 below); 2) less than 4" in diameter shall be ULTRA-HIGH WEIGHT, CTS POLYETHYLENE TUBING DESIGNED FOR A WORKING PRESSURE OF 200 PSI (AWWA C-901, ASTM-D-1248 AND ASTM-D-2737). All water line fittings shall be ductile iron, (AWWA C-110), cement-lined. For water lines less than 4 inches in diameter, fittings (other than valves) shall MEET MANUFACTURER'S RECOMMENDATIONS AND MEET VERMONT ACT 193 REQUIREMENTS FOR LEAD CONTENT.
8. All buried valves shall conform to AWWA C-504 or C-509, and be resilient wedge gate valves up to 12 inch in size, and either resilient wedge or butterfly valves for larger sizes. <u>All gate valves shall open right (clockwise)</u> and shall have adjustable iron valve boxes extending to the finished grade (see Typical Details).
9. Hydrants shall be in accord with AWWA C-502, 3-way post type breakaway Kennedy KBI-A, with two (2) 2-1/2" hose nozzles and one (1) 4-1/2" steamer nozzle. <u>Nozzle threads shall be Roxbury double-start.</u> Hydrants shall be provided with a 6.5' bury (riser). In all cases, it is the Contractor's responsibility to check with the Public Works Department to secure approval of the selected hydrant(s) and assure compatibility. All Hydrant drains shall be permanently plugged, or a non-draining hydrant shall be installed. All Hydrants shall be set back a minimum of three (3) feet from paved surfaces. In addition, wherever a traffic hazard appears to exist (in the opinion of the Public Works Department), the hydrant shall be protected by curbing and/or post-stanchions.
10. Curb boxes shall be Buffalo type with telescoping top and bolt-on caps.
11. All water lines and appurtenances shall be pressure and leak-tested, before being placed into service, according to AWWA Standard C-600. The test pressure shall be 200 psi (+/- 5psi), measured at or near the high point in the portion of the system being tested, and the test shall be run for two (2) hours. The Public Works Department shall be given at least twenty-four (24) hours notice before the test is to be conducted, and DPW personnel shall witness the test. Allowable leakage shall be computed by the following formula, L=(S x D x sq. root(P))/133200, where L=number of gallons allowed leakage per hour, S=length of pipe tested in feet, D=inches of nominal pipe diameter, P=average test pressure (psi gauge). The person(s) conducting the test(s) shall, IN WRITING, certify the results to the Public Works Department.
15. All water lines, before being put into service, shall be disinfected in accordance with the latest edition of AWWA C-651, or as directed by the Public Works Department. Contractor shall install 1" diameter tap in water main for chlorine injection. Tap shall be located as approved by the Public Works Department. The person(s) responsible for disinfection shall certify, IN WRITING, to the Public Works Department and Vermont Department of Health that this disinfection procedure was followed and the required minimum results were obtained. Contractor shall be responsible for all sampling and analysis costs. <u>TAP USED FOR CHLORINATION SHALL BE CLOSED AND PLUGGED PRIOR TO BACKFILL.</u> The contractor shall perform all construction activities in conformance with the latest edition of AWWA C-651. <u>THE CONTRACTOR SHALL RECEIVE THE LATEST EDITION OF BURLINGTON'S WATER REPAIR FLOW CHART TO ENSURE CONFORMANCE WITH AWWA C-651. THE CITY REQUIRES BAC-T SAMPLES BE COLLECTED AND TESTED ANY TIME THE EXISTING WATER SYSTEM IS CUT INTO.</u>
16. Water main valves and curb stops shall be inside city right-of-way.
17. No valves, hydrants, curb stops, etc. shall be operated without prior approval by the Public Works Department.
18. All taps larger than 1" require the use of bronze saddles. SADDLES ARE REQUIRED FOR ALL TAPS ON PVC PIPE.
19. All brass unions and adapters shall be low-lead by <u>Cambridge</u>.
20. All corporations and curb stops shall be <u>Cambridge</u> with nitrile gaskets.
21. Water mains 4" and larger shall be AWWA C900 PVC pipe with a pressure class of 305 psi (DR14). Mains 2" or less shall conform to AWWA C901 and be HDPE CTS pipe with a pressure class of 200 psi (SIDR 9). All plastic pipe (INCLUDING SERVICES) will require a 12 AWG high strength copper clad steel tracer wire with blue insulation fastened directly to the top of pipe with nylon tie wraps or electrical tape. This tracer wire shall be a continuous run (no splices) between valves with ends for attaching a locating signal at every valve box, end of pipe run or every 500' of pipe, whichever is less. If no valve boxes are located within 500' of each other, a magnetized tracer box is required. Waterproof splices shall be allowed in valve boxes as per the detail on this sheet. Tracer wire, tracer boxes and wire nuts shall be manufactured by Copperhead Industries or approved equal. In addition, detectable metallic underground tape labeled "Caution Buried Water Line Below" shall be manufactured by Trumbull Industries or approved equal and buried approx. 2' below finished grade.
22. <u>Nitrile Butadiene Rubber (NBR) gaskets shall be used in lieu of the standard Styrene Butadiene Rubber (SBR) gaskets for C900 water pipe and fittings.</u>

REV. NO.	DATE	DESCRIPTION	DRAWN	CHECKED

BURLINGTON, VT PUBLIC WORKS

WATER SYSTEM DETAILS

CITY OF BURLINGTON, VT

DESIGNED: SR/MSL
DRAWN: SR/MSL
CHECKED: SR/MSL
SCALE: NONE
DATE: 12/11/18

DRAWING NO. D-1

SITE ENGINEER:

CIVIL ENGINEERING ASSOCIATES, INC.
10 MANSFIELD VIEW LANE, SOUTH BURLINGTON, VT 05403
P: 802-864-2323 FAX: 802-864-2271 web: www.cea-vt.com

COPYRIGHT © 2023 - ALL RIGHTS RESERVED

DRAWN: MAB
CHECKED: DSM
APPROVED: DSM

CLIENT:

405 INVESTMENT CORPORATION

135 CHURCH STREET
BURLINGTON, VT 05401

PROJECT:

BURLINGTON CITY ARTS FOUNDATION, INC.

405 PINE STREET
BURLINGTON, VT

DATE	CHECKED	REVISION
09/25/23	DSM	UPDATED DETAILS PER CITY COMMENTS

DETAILS

DATE: JAN. 2022
SCALE: AS SHOWN
PROJ. NO.: 21212

DRAWING NUMBER: C4.2

P:\AutoCADD Projects\2021\21212-Tuxedo\Billing1-CADD Files\dwg\21212 - Detail - Spec.dwg, 10/6/2023 1:58:03 PM, DWG To PDF.pc3

Proposed Water/Sewer Design Flows

405 Investments Corporation
135 Church Street, Burlington, VT 05401

Prepared by: Civil Engineering Associates, Inc.
10 Mansfield View Lane - South Burlington, VT 05403
November 28, 2022

Existing Water Flows:
Existing 405 Pine Street WW-4-2427

· 22 employees	x 15	gpd/person=	330 gpd	
			Total Existing Water Flows =	**330 gpd**

Proposed Water Flows:
Proposed 405 Pine Street Burlington City Arts Center

· 25 employees	x 15	gpd/person=	375 gpd	
· 194 people in multi-function space	x 4	gpd/visitor=	776 gpd	
· 65 Kids in summer camp - day camp, no meals	x 13	gpd/kid=	845 gpd	
· 45 Adult Students, no meals or showers	x 12	gpd/student=	540 gpd	
			Total Proposed Water Flows =	**2,536 gpd**
			Additional Water Allocation Needed =	**2,206 gpd**

Existing Sewer Flows:
Existing 405 Pine Street WW-4-2427

· 22 employees	x 15	gpd/person=	330 gpd	
		20% Municipal Reduction =	*66 gpd*	
			Total Existing Sewer Flows =	**264 gpd**

Proposed Sewer Flows:
Proposed 405 Pine Street Burlington City Arts Center

· 25 employees	x 15	gpd/person=	375 gpd	
· 194 people in multi-function space	x 4	gpd/visitor=	776 gpd	
· 65 Kids in summer camp - day camp, no meals	x 13	gpd/kid=	845 gpd	
· 45 Adult Students, no meals or showers	x 12	gpd/student=	540 gpd	
			Total Proposed Sewer Flows =	**2,536 gpd**
			Additional Sewer Allocation Needed =	**2,272 gpd**

Table 11-1
Horizontal Isolation Distances, in Feet for Potential Sources of Contamination

Potential Source of Contamination	Potable Sources in Bedrock or Confined Surficial Aquifer	Potable Water Sources in Unconfined Surficial Aquifer	Water Service Lines and Water Service Pipes (Pressure)	Water Service Lines and Water Service Pipes (Suction)	Water Storage Tanks (Atmospheric Below Ground Surface)
Agricultural cropland	100	200	25	100	50
Building or structures, porches, foundations of building or structures	5	5	N/A	N/A	N/A
Cemeteries	100	150	25	100	50
Composting sites (commercial or agricultural) [1]	200	300	25	300	50
Concentrated livestock holding areas barnyard [2]	200	500	25	100	50
Driveways (fewer than 3 residences)	5	10	N/A	N/A	10
Driveways (3 or more residences), roadways, parking lots	25	25	N/A	N/A	25
Fertilizers or pesticide storage structures (buried tank of any size; above ground tank >1,500 gallons; dry or liquid; and piping serving a non-residential facility)	100	200	50	200	50
Fuel oil, gasoline & other petroleum tanks and piping (not including liquefied petroleum gas tank)	25	100	25	100	50
Herbicide or pesticide application on utility right of way where herbicides or pesticides either have been applied in the last 12 months or may be applied within the next 12 month [3]	100	200	25	200	100
Leachfields (proposed, existing, or permitted)	Requires isolation zone (see Table 11-2)		25	100	100
Manure storage systems, above ground [2]	50	100	25	50	50
Manure storage systems, in- ground concrete or geosynthetic lined [2]	100	200	25	200	100
Manure storage systems, earthen lined [2]	200	500	25	200	200
Property lines	10	10	N/A	N/A	10
Salvage yards [4]	300 [8]	300 [8]	25	300	100
Sanitary sewer collection lines and sanitary sewer service lines	50	75	Distances and requirements established in Section 1-1204 apply in lieu of this Section		50
Silage storages	50	75	25	75	50
Solid waste transfer facilites [5]	100	200	25	200	100
Stormwater conveyance/treatment/control practice (lined)	10	10	10	10	10
Stormwater conveyance/treatment/control practice (unlined and subsurface systems)	100	150	10	150	25
Storm sewers	10	50	Distances and requirements established in Section 1-1204 apply in lieu of this Section		10
Surface water, normal high water elevation [6]	10	25	N/A	N/A	25
Wastewater disposal spray area and lagoons	200	300	50	300	100
Wastewater tanks (proposed, existing, or permitted) [7]	Requires isolation zone (See Table 11-2)		25	50	50

[1] Isolation distances for composting sites (commercial or agricultural) shall be measured from the perimeter of the composting are or area used for storage of composted material.
[2] Isolation distances for concentrated livestock holding areas and manure storage systems shall be measured from the perimeter of the holding area or outside perimeter of the manure storage system.
[3] Isolation distances for herbicide or pesticide application on utility right of way where herbicides or pesticides either have been applied in the last 12 months or may be applied within the next 12 month shall be measured from points of application of the herbicide or pesticide.
[4] Isolation distances for salvage yards shall be measured from the perimeter of the area used for the storage of salvaged materials to the component.
[5] Isolation distances for solid waste transfer facilities shall be measured from points within the transfer facility used for storing solid waste.
[6] The horizontal location to surface water shall allow for possible future widening of the surface water due to bank expansion.
[7] Wastewater Tanks include septic tanks, pump stations, dosing siphons, holding tanks, wastewater storage tanks, wastewater treatment tanks, sand filters, constructed wetlands, and grease tanks.
[8] If the applicant's designer demonstrates that the groundwater flow from the salvage yard is not in the direction of the potable water source, the isolation distance shall be 100 feet rather than 300 feet.

VERMONT WATER SUPPLY RULE - CHAPTER 21
TABLE 11-1 - HORIZONTAL ISOLATION DISTANCES

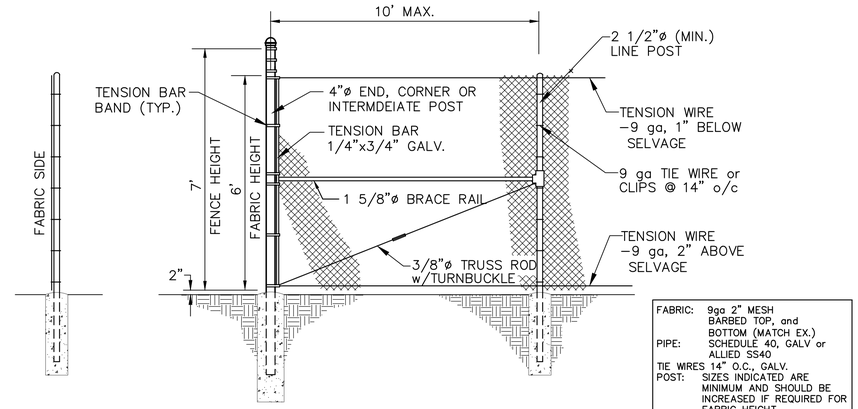

FABRIC: 9ga 2" MESH BARBED TOP, and BOTTOM (MATCH EX.)
PIPE: SCHEDULE 40, GALV or ALLIED SS40
TIE WIRES 14" O.C., GALV.
POST: SIZES INDICATED ARE MINIMUM AND SHOULD BE INCREASED IF REQUIRED FOR FABRIC HEIGHT

CHAIN LINK FENCE TYPICAL DETAIL
N.T.S.

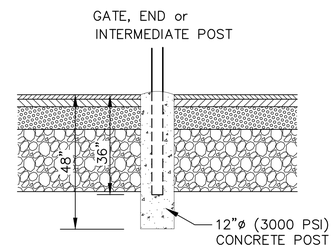

POST SETTING DETAIL
N.T.S.

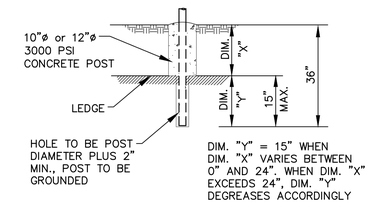

LEDGE CONDITIONS

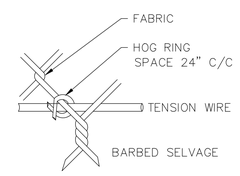

HOG RING FASTENER
N.T.S.

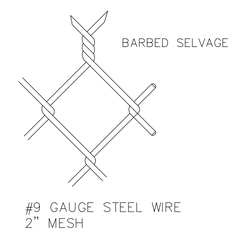

CHAIN LINK FABRIC
N.T.S.

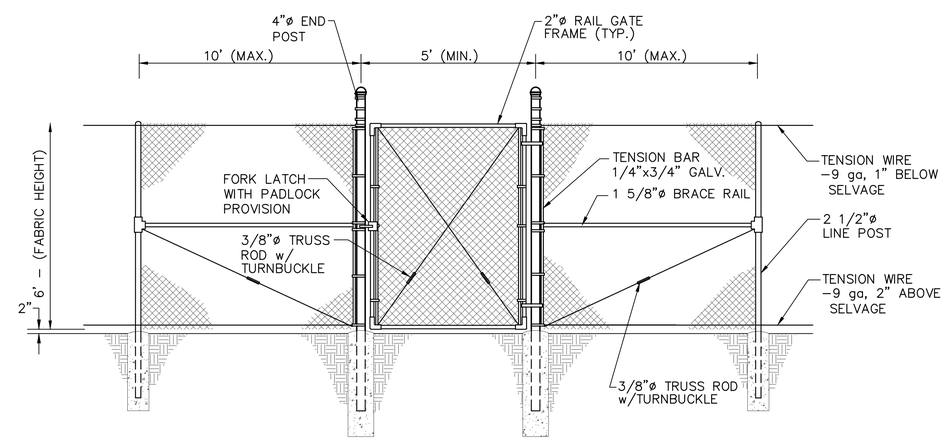

PEDESTRIAN SWING GATE DETAIL
N.T.S.

SITE ENGINEER:

CIVIL ENGINEERING ASSOCIATES, INC.
10 MANSFIELD VIEW LANE, SOUTH BURLINGTON, VT 05403
P: 802-864-2323 FAX: 802-864-2271 web: www.cea-vt.com

COPYRIGHT © 2023 - ALL RIGHTS RESERVED

DRAWN: MAB
CHECKED: DSM
APPROVED: DSM

CLIENT:

405 INVESTMENT CORPORATION

135 CHURCH STREET
BURLINGTON, VT 05401

PROJECT:

BURLINGTON CITY ARTS FOUNDATION, INC.

405 PINE STREET
BURLINGTON, VT

DATE	CHECKED	REVISION
09/25/23	DSM	UPDATED DETAILS PER CITY COMMENTS

DETAILS

DATE: JAN. 2022
SCALE: AS SHOWN
PROJ. NO.: 21212
DRAWING NUMBER: C4.3

F:\AutoCADD Projects\2021\21212-Truescullins\1-CADD Files-Vdwg\21212 - Detail - Spec.dwg 10/6/2023 1:57:47 PM, DWG To PDF.pc3

distance sufficient to leave at least 12" clear between outer surfaces and the embankment or shoring that may be used to hold and protect the banks.

2. Over–depth excavation beyond such appurtenances that has not been directed will be considered unauthorized. Fill with sand, gravel, or lean concrete as directed by the Engineer, and at no additional cost to the Owner.

H. Excavation shall not interfere with normal 45° bearing splay of foundations.

I. All trenching shall be in accordance with the latest OSHA requirements.

J. Where utility runs traverse public property or are subject to governmental or utility company jurisdiction, provide depth, bedding, cover, and other requirements as set forth by legally constituted authority having jurisdiction, but in no case less than the depth shown in the Contract Documents.

K. Where trenching occurs in existing lawns, remove turf in sections and keep damp. Replace turf upon completion of the backfilling.

3.03 BEDDING

A. Pipe Bedding Area: Prior to laying pipe, bedding material shall be placed to the limits of the excavation and to a depth beneath the pipe as specified. This material shall be either sand, gravel, or crushed stone and shall not contain large lumps and stones over one inch in diameter. As the pipe is laid, bedding material shall be extended to 6" above the pipe and leveled along the width of the trench.

3.04 BACKFILLING

A. Backfilling shall not be done in freezing weather, with frozen materials, or when materials already placed are frozen.

B. Unless otherwise specified or indicated on the plans, material used for backfilling trenches above the bedding area shall be suitable material which was removed during excavation or obtained from borrow and when compacted shall make a dense stable fill. The material shall not contain vegetation, porous matter, masses of roots, individual roots more than 18 inches long or ½ inch thick, or stones greater than 50 pounds or larger than six inches in the widest dimension.

C. If additional material is required, it shall be furnished from approved sources.

D. Backfill material shall be evenly spread and compacted in lifts not more than 8 inches thick or as approved by the Engineer. Previously placed or new materials shall be moistened by sprinkling, if required, to ensure proper bond and compaction.

E. Reopen trenches which have been improperly backfilled, to a depth as required for proper compaction. Refill and compact as specified, or otherwise correct to the approval of the Engineer.

F. Should any of the work be so enclosed or covered up before it has been approved, uncover all such work and, after approvals have been made, refill and compact as specified, all at no additional cost to the Owner.

G. Take special care in backfilling and bedding operations to not damage pipe and pipe coatings.

H. No compacting shall be done when the material is too wet to be compacted properly. At such times the work shall be suspended until the previously placed and new materials have dried out sufficiently to permit proper compaction, or such other precautions are taken as may be necessary to obtain proper compaction.

I. Backfill material shall be compacted to the following percentages of maximum dry density and the in–place moisture content shall not be more than 2% above the optimum moisture content, as determined by Modified Proctor ASTM D1557.

1. Around all structures, under roadway paving, shoulder and embankments – 95%.

2. All other areas – 90%.

WATER SUPPLY SYSTEM

PART 1 – GENERAL

1.01 SUMMARY

A. Section includes:

1. Pipe Materials
2. Hydrants
3. Valves
4. Fittings
5. All other appurtenances necessary to complete the water main system as shown on the Contract Plans.

B. Related Sections:

1. Utility Trenching and Backfilling

1.02 SUBMITTALS

A. Product Data: Submit published data from manufacturers of products and accessories specified, indicating compliance with requirements to the Engineer and local municipality.

1.03 QUALITY ASSURANCE

A. All materials and the installation procedure shall be in accordance with the Department of Environmental Conservation, Vermont Drinking Water and Groundwater Protection Division and the applicable construction ordinances of the local municipality.

PART 2 – PRODUCTS

2.01 GENERAL

A. Furnish ells, tees, reducing tees, wyes, couplings, increasers, crosses, transitions and end caps of the same type and class of material as the conduit, or of material having equal or superior physical and chemical properties as acceptable to the Engineer as necessary to complete the water system.

B. All wetted components shall be NSF 61 certified and comply with VT Act 198 (VT Lead Law)

2.02 WATER MAIN MATERIAL

C–900 PVC WATER MAIN

A. Pipe shall be C–900 (DR–14 200 psi) PVC (sizes as shown on the plans) conforming to current AWWA C–900, latest revision and shall be UL and FM approved. Larger size mains will be required if necessary to allow withdrawal of the required fire flow while maintaining the minimum pressure specified in the Vermont Drinking Water and Groundwater Protection Division Rule, Chapter 21, 8.1.1. Any proposed departure from minimum requirements shall be justified by hydraulic analysis and future water use assessment, and will be considered only in special circumstances (Vermont Drinking Water and Groundwater Protection Division Rule, Chapter 21 8.1.4). Push–on joint accessories shall conform to applicable requirements of ANSI/AWWA C111/A21.11.

B. When a pipe material is specifically noted on the contract drawings,the contractor/developer shall not have the option of utilizing any other pipe material. Galvanized pipe or fittings shall not be used in any water system owned or maintained by the Town. The Town Water Department requires the use of polyethylene pipe sleeve encasements and/or alternate pipe materials in known or suspected corrosive soil conditions. Any changes to the approved design will require approval by the Vermont Water Supply Division.

DUCTILE IRON WATER PIPE

A. Pipe shall be Tyton Ductile Iron Class 52 (sizes as shown on the plans) conforming to current ANSI/AWWA C151/A21.51 latest revision. Push–on joint pipe shall be minimum thickness Class 52. Push–on joint accessories shall conform to applicable requirements of ANSI/AWWA C111/A21.11.

B. Pipe shall be cement mortar lined on the inside in accordance with ANSI Specification A21.4 except that the cement lining thickness shall not be less than 1/8 inch. A plus tolerance of 1/8 inch will be permitted.

C. Pipe shall be given an exterior petroleum asphaltic coating in accordance with ANSI/AWWA Specification C151/ASNI A21.51.

D. Pipe shall be poly wrapped with a minimum thickness of 4 mil poly in accordance with AWWA Specification C105 / ANSI A21.5, unless approved otherwise.

2.03 FITTINGS

A. Ductile iron fittings shall conform to ANSI/AWWA C110/A21.10, 350 PSI working pressure. Ductile iron fittings larger than twelve inches (12") shall have a standard body length equal to Class 250 Cast Iron fittings. Cast Iron Class 250 fittings will be allowed in lieu of ductile iron fittings larger than twelve inches (12"). Ductile iron fittings shall be rated for 250 p.s.i. However, twelve inch (12") and smaller may be rated for 350 p.s.i. with the use of special gaskets. All ductile iron compact fittings shall conforming to AWWA/ANSI C153/A21,53 standards.

B. Anchor tees shall be standard mechanical joint tees except that the branch is plain Class 250 cast iron or Class 350 ductile iron, cement lined, conforming to ANSI/AWWA C110/ A21.10, C111/A21,11, and C104/A21.4. Anchor tees shall be Clow F–1217, U.S. Pipe U5–92 or equal.

C. Mechanical Joint restraints shall be incorporated into the design of the follower gland and shall include a restraining mechanism which, when actuated, imparts multiple wedging action against the pipe increasing its resistance as the pressure increases. Flexibility of the joint shall be maintained after burial. Glands shall be manufactured of ductile iron, and have a minimum working pressure of 350 psi. Twist off nuts (i.e. mega–lug) or equal shall be used to ensure proper actuating of the restraining devices. Contractors may also use approved grip ring (or equal) retainer glands.

D. Bolts shall conform to ANSI Specification A21.10.

E. Pipeline couplings shall conform to AWWA Standards C110 and ANSI A21.10. Mechanical joint connecting pieces of proper diameter shall be installed in accordance with the manufacturer recommendations and at locations directed by the plans or the Town Water Department.

F. All fittings shall be restrained; double poly wrapped and have concrete thrust blocks poured in place as defined herein.

2.04 TAPPING SLEEVES AND VALVES

A. The Town Water Department shall be notified whenever a proposed tap is to be made on any transmission main within the municipal system.

B. Only approved tapping companies shall be allowed to perform wet taps on any Town Water Department water mains.

C. All materials used when tapping for a branch connection or interconnection from any Town Water Department water transmission or distribution pipelines shall be specified below

2.05 TAPPING SLEEVES

For use on existing asbestos cement, gray cast iron, ductile iron or PVC C–900 pipe:

A. Tapping sleeves shall be of the split sleeve design, constructed with two solid half–sleeves bolted together. Sleeves shall be constructed of ductile iron, shall have a working pressure of at least 250 psi, and shall have mechanical joint ends with end and side gasket seals.

B. All iron body tapping sleeves shall be provided with a 3/4" NPT test plug, or other provisions must be made for air testing the valve and sleeve at maximum working pressure, prior to tapping.

C. All bolts and nuts for mechanical joints of tapping sleeves shall be of high–strength cast iron or high–strength, low–alloy steel conforming to ANSI/AWWA C111/A21.11.

D. All bolts and nuts for flanged joints of tapping sleeves shall be of high–strength, low carbon steel conforming to ANSI/AWWA C110/A21.10.

E. All bolts and nuts shall be sound, clean, and coated with a rust–resistant lubricant; their surfaces shall be free of objectionable protrusions that would interfere with their fit in the made–up mechanical or flanged joint.

2.06 TAPPING VALVES

A. Tapping valves shall conform to ANSI/AWWA C509 Standard for Resilient–Seated Gate Valves for Water and Sewage Systems, except as modified herein. Valves shall open counterclockwise and shall have a minimum working pressure of 200 psi. Inlet flanges shall be Class 125 conforming to ANSI Specification B16.1 or ANSI/AWWA C110/A21.10, and outlet connection shall be Standardized Mechanical Joint unless specified otherwise on the drawings for the type of pipe required for the branch or lateral pipeline.

B. Tapping valves over sixteen inches (16") diameter shall be installed with their stems horizontal, shall be equipped with rollers, tracks and scrapers, and shall be provided with bypass valves unless otherwise specified.

C. Buried tapping valves shall be provided with a two inch (2") square wrench nut and shall be installed with a cast iron valve box as required to allow positive access to the valve operating nut at all times. In installations where the depth from grade to top of valve operating nut is greater than 5'0", a valve stem riser shall be provided and installed such that the depth from valve stem riser nut to grade is from four feet to five feet (4'–5'), (minimum length of valve stem riser is two feet (2')). Valve stem riser shall be of high strength steel and of welded construction.

D. All contractors (or others) who apply for water line tapping permits shall submit complete specifications of the tapping material they intend to use at the time the tapping permit application is submitted on 8 1/2" x 11" shop drawing sheets

E. All bolts and nuts used with all pipe sleeves shall, upon final tightening and testing, be brush coated heavily with bitumastic cold–applied material to thoroughly cover all exposed surfaces of the bolts and nuts.

2.07 GATE VALVES–RESILIENT SEAT

A. Valves shall be manufactured to meet all requirements of AWWA Specification C509, latest edition. Valves twelve inches (12") and smaller shall be bubble tight, zero leakage at 200 psi working pressure. Valves shall have non–rising stems, open counter clockwise, and provide a two inch (2") square operating nut with arrow cast in the metal indicating direction of opening. Each valve shall have maker's name, pressure rating and year in which manufactured cast on the body. Prior to shipment from the factory, each valve shall be tested by hydrostatic pressure equal to twice the specified working pressure. Gate valves shall be Mueller, Kennedy, AFC, or approved equal.

B. Buried valves shall be installed with a gate valve box.

C. Gate valves shall normally be placed a maximum of five hundred feet (500') apart. Tee intersections shall have a minimum of three (3) gate valves. Cross sections (four way intersections) shall have a minimum of four (4) valves.

D. The Town Water Department may require all bolts, studs and nuts be made from a corrosion resistant–material stainless steel.

2.08 VALVE BOXES

A. Valve boxes shall be of the three–piece Cast iron slide–type with a minimum inside shaft diameter of five and one quarter inches (5 1/4") and a six foot (6') trench depth. Valve boxes shall not transfer loads onto the valve.

B. Valve boxes shall have a cast iron cover, marked "WATER". The boxes shall be dirt tight with the top of the cover flush with the top of the box rim.countersunk brass pentagon plug for paved or concrete areas, and standard two holes for grass areas. Curb box couplings and extensions will be the same material as the curb box. Both cover and upper section of the box shall be able to be located with an aqua type metal locator.

C. All service connections shall be installed to the curb stop for all building lots before the street is paved.

D. Valve boxes located in roadways shall have one non–adjusting paving riser of a height ranging from one and a half inches (1.5") to six inches (6") as needed to be brought to final pavement grade.

2.09 BACKFLOW PREVENTION DEVICES

A. No water service connection shall be approved or maintained by the Town Water Department unless the water supply is protected as required by State laws, regulations and ordinances. The type of protective device shall depend on the degree of hazard that exists. In general, backflow devices designed to protect potable water supplies in accordance with national plumbing codes for non–health hazard cross connections and continuous pressure applications shall be used, i.e. Watts Series 007 or approved equal. Watts Series 709 Double Check Valve Assembly or approved equal shall be installed on all sprinkler systems. A shop drawing detail assembly showing backflow devices and meter placements shall be required by the Town Water Department.

2.10 PIPE BEDDING

A. Water lines shall be laid and maintained on lines and grades established by the plans for the project. Pipeline trenches shall be excavated to the width and depths shown on the plan typicals. Pipeline trenches in which pipe is to be laid directly on the trench bottom shall not be excavated entirely by machinery, but shall be finally excavated by hand tools such that the trench shall have a bottom shaped to support the pipe throughout its entire length by firm and undisturbed material. Pipeline trenches, for which bedding is required, may be excavated to the required depths using machinery. No pipe shall be laid directly on ledge, hard shale or a very compact glacial till. When an unstable trench bottom is encountered and the Town Water Department determines that it cannot support the pipe adequately, an additional depth shall be excavated and refilled to the pipe invert with approved material at the contractor's expense. Pipeline trenches shall be dry during the laying of pipe. Wood supports under pipe shall be removed prior to backfilling. Pipeline installation procedures can be found in AWWA Standard C600.

B. Bedding material shall consist of crushed or natural stone conforming to ASTM D2321.

Sieve	Percent Passing
1" Screen	100%
¾" Screen	100%
½" Screen	90 – 100%
⅜" Screen	40 – 70%
No. 4 Sieve	0 – 15%

C. Bedding and blanket material shall be Class II material (ASTM D2321) consisting of clean, granular material (sand), particle size limits described as follows:

Sieve	Percent Passing
No. 4	100%
No. 100	30%
No. 200	12%

2.11 PIPELINE INSULATION

A. Approved waterlines with less than six feet (6'–0") of cover over the crown, that cross a storm sewer, or where indicated on the plans, shall be protected against freezing by the installation of two inch (2") thick highest available density extruded polystyrene insulating sheets or equivalent. Sheets shall be the the lesser of 3' or 2 x diameter of the pipe. The sheets shall be placed six inches (6") above the crown after placement of four to six inches (4" – 6") of clean medium or coarse sand below the pipe bottom and four to six inches (4" – 6") above the crown. Joints shall be overlapped so there is no gap that will allow frost to penetrate. Care shall be exercised during backfill and compaction over the polystyrene sheets to prevent damage to the sheets. The polystyrene sheets shall meet the comprehensive strength requirements of ASTM D1621–73. In no cases shall the waterline have less than four feet (4') of cover over the top of the pipe.When water line passes within 5 feet of a catch basin install 2" min. rigid insulation, polystyrene sheets, between water line and cb.

2.12 POLYETHYLENE PIPE ENCASEMENT

A. Polyethylene pipe encasement may be required in areas of corrosive soils and shall conform to current ANSI/AWWA C105/A21.5 Specifications. Minimum material requirements for the polyethylene film shall be high density, cross laminated virgin polyethylene 4 mil film. The Town Water Department reserves the right to specify Polyethylene pipe, C–900, in areas of corrosive soils.

B. The polyethylene encasement shall prevent contact between the pipe or fittings and the surrounding backfill and bedding material and shall be installed as outlined in Section 4.1 of the above ANSI/AWWA standard.

2.13 CONCRETE FOR THRUST BLOCKS

A. Concrete shall be Portland Cement concrete of 3,000 psi minimum 28 day compressive strength. ASTM C–94 specification for transit mixed concrete shall control the concrete quality. A maximum water cement ratio of 6 gallons per sack and a maximum slump of four inches (4") will be allowed.

2.14 FIRE HYDRANTS AND HYDRANT BRANCHES

A. Fire hydrants shall be Kennedy K–81AWC, Kennedy Valve Item #154686553510BVT (HYDT 5" K81AWC, PVC FROST JKT, 6) and shall conform to AWWA C502 with the following specifications:

Upper: 5–1/4" K81AW–BL 3–W AWWA
Color: Red (01)
Hose: 2–1/2" – 3.058 x 3 Double TPI 1/6 Pitch –1/3 Lead
Steamer: 4" – 5.025" OD x 4 TPI
Nut Size: 11/2" P W/AW Dirt Shield
Open: Left
Trench: 6'–6" w/ Prot Case Cap & Frost Jacket
!!! Must have a No Drain Seat Ring !!!
Elbow: M62 6" MJ – Expoxy
Stencil: "Burlington, VT"

1. Hydrants shall be Complete Insert type with the lower barrel threaded into the elbow. Designs using fasteners to secure the lower barrel to the elbow will not be accepted.

2. The lower barrel and elbow shall be ductile iron. Cast Iron will not be accepted.

3. The elbow shall be epoxy coated and utilize brass tube drain holes. A brass seat ring insert shall be threaded into the elbow and mechanically retained by two brass set screws.

4. The protective case shall be C909 pipe. The case cap shall be polyester coated iron.

5. The operating nut shall be of one piece bronze construction incorporating an iron dirt shield.

6. Nozzles shall be tamper resistant 1/4 turn type with O–rings and stainless steel retaining screws.

7. The main valve shall be synthetic rubber reinforced with steel.

8. Hydrants shall be Guardian K–81AWC as manufactured by Kennedy Valve or approved equal.

B. For single–family house subdivisions, there will be at least one hydrant at each intersection and a maximum of five hundred feet (500') between hydrants with a minimum water flow of 500 gallons per minute (gpm) at the flow hydrant with a 20–psi residual pressure at the residual hydrant. Hydrants should be located immediately adjacent to street property lines. A 20' x 20' easement will be required around all hydrants. No structures or plantings are to be placed within a 20' x 20' area of any hydrant.

C. Where dead–end mains occur, they shall be provided with a fire hydrant if flow and pressure meet minimum requirements. If flows and pressure are not sufficient, then an approved flushing hydrant or blow off shall be installed for flushing purposes. Flushing devices should be sized to provide flows which will give a velocity of at least 2.5 feet per second in the water main being flushed. The open end of a blow off must be capped and terminate at least eighteen inches (18") above grade.

D. When set in lawn space between the curb and sidewalk, no portion of the hydrant or nozzle cap will be less than one foot off the gutter face of the curb or edge of the sidewalk. Hydrants shall be a minimum of four feet (4') and a maximum of six feet (6') from the edge of the sidewalk to the closest point on the hydrant when placed behind the sidewalk. In the absence of a curb or sidewalk, no hydrant shall be placed more than six feet (6') from the edge of pavement. Hydrants shall be located so as to provide complete accessibility and minimize the possibility of damage from vehicles or injury to pedestrians.

2.15 HYDRANT ASSEMBLIES

A. Hydrant assemblies shall consist of an anchor tee, a six inch (6") mechanical joint gate valve conforming to the above specifications, the appropriate length of six inch (6") Ductile Iron Cement Lined, Class 52 pipe, all necessary anchor couplings and approved restraining glands, the fire hydrant and appropriate thrust block.

B. Care shall be taken to prevent damage to hydrants and appurtenances during handling and installation. All materials shall be carefully inspected for defects in workmanship and materials; all debris and foreign material cleaned out of the hydrant bowl; all operating mechanisms operated to check their proper functioning, and all nuts and bolts checked for tightness. All hydrants shall be carefully incorporated in the water main and supported in their respective positions free from distortion and strain. Hydrants shall be set plumb. All hydrants shall be oriented to most efficiently allow fire truck access and connection for emergency purposes. They shall be installed away from the curb line at sufficient distance to avoid damage from or to vehicles. Traffic model hydrants shall be installed so the breakaway flange is not less than two inches (2"), nor more than six inches (6") above the established grade, according to manufacturer recommendations. Hydrant locations are subject to the approval of the Town Water Department and the appropriate municipality's fire department. Installation for fire hydrants can be found in AWWA Standard C600.

2.16 SERVICE CONNECTIONS

A. Service lines shall be installed so as to run perpendicular, in a straight line from the water main to the curb stop.

B. Each service shall consist of a corporation, curb stop, copper tubing and a curb box with a cast iron or stainless steel service rod. Service lines from three–quarter to two inch (3/4" to 2") shall be copper tubing from the corporation stop to the curb stop. Copper tubing shall be type "K", soft temper, conforming to ASTM B88. The name or trademark of the manufacturer and type shall be stamped at regular intervals along the pipe. Copper service pipe shall be one piece from the corporation to the curb stop. The minimum service for a single–family residence shall be three–quarter inch (3/4"). The minimum service for a duplex shall be one inch (1").

C. Corporations shall be Cambridge Brass Low–Lead and manufactured in accordance with AWWA C800. Corporations shall have threads per AWWA C800 Table 7 / Figure 2, at the inlet and a compression type fitting at the outlet. Both inlet and outlet shall be the same size. Three–quarter inch and one–inch corporations shall be directly tapped into ductile iron pipe six inches (6") and larger in diameter. Larger size corporations up to two inches (2") shall use a tapping saddle. Pipe less than six inches (6") shall require the use of a tapping saddle and corporation. Corporations shall be used for all taps up to two inches (2"). In no instance, except when a tapping sleeve and valve are used, shall a tap be made without a corporation. Corporations shall be Cambridge Brass (3/4" – 1"), and (1 1/2" – 2"). A connection made to a pipe that requires a tapping saddle or is not ductile iron will have a body with a suitable outlet, seal, and suitable means for attachment to the main. The body shall be made to conform to the outside configuration of the main. The service saddle shall be designed to provide a drip tight connection. The body shall be Teflon or Epoxy coated with stainless steel strap(s), bolts, nuts, and mechanism for attaching to the pipe barrel. Gaskets shall be nitrile.

D. Curb stops shall be a ball valve type with a minimum allowable pressure rating of 300 psi and be manufactured in accordance with AWWA C800. The curb stop shall open left, have a positive stop, be full port, provide drip–tight shutoff in the closed position and be of the tee design or flat design. No curb stop shall have the ability to drain the service line. Both the inlet and outlet of the curb stop shall have compression type fittings. The tee head of the curb stop shall have the provision for the connection of a service rod. Curb stops shall be Cambridge Brass Low–Lead. The curb stop shall rest on a four inch by eight inch by sixteen–inch (4" x 8" x 16") concrete block for support. Curb stops shall be installed just inside the municipality R.O.W.

E. Curb boxes shall be of sliding adjustable type capable of adjusting from five feet to six feet (5' – 6') (Buffalo Style). The base of the box shall be arch type so as to prevent the box from resting on the curb stop. The adjustable upper section shall be one inch (1") diameter for use with 3/4" and 1" curb stops. For larger curb stops, the upper section shall be 1 1/4" in diameter. Stationary rods affixed to the key of the curb stop with a brass pin shall be thirty inches (30") in length for 3/4" and 1" curb stops and twenty–four inches (24") for large curb stops. Curb box rods may be cast iron or stainless steel, as determined by the Town Water Department. The word "WATER" shall be inscribed on the

SITE ENGINEER:

CIVIL ENGINEERING ASSOCIATES, INC.
10 MANSFIELD VIEW LANE, SOUTH BURLINGTON, VT 05403
P: 802-864-2323 FAX: 802-864-2271 web: www.cea-vt.com

COPYRIGHT © 2023 – ALL RIGHTS RESERVED

DRAWN: MAB
CHECKED: DSM
APPROVED: DSM

CLIENT:

405 INVESTMENT CORPORATION

135 CHURCH STREET
BURLINGTON, VT 05401

PROJECT:

BURLINGTON CITY ARTS FOUNDATION, INC.

405 PINE STREET
BURLINGTON, VT

DATE	CHECKED	REVISION
09/25/23	DSM	UPDATED SPECIFICATIONS PER CITY COMMENTS

SPECIFICATIONS

DATE: JAN. 2022
SCALE: NTS
PROJ. NO.: 21212

DRAWING NUMBER: C5.2

P:\AutoCADD Projects\2021\21212-Tuxesullins\1-CADD Files\dwg\21212 - Detail - Spec.dwg 9/25/2023 10:57:28 AM, DWG To PDF.pc3

cover of the box.

PART 3 – EXECUTION

3.01 INSTALLATION

A. Contractors shall notify the Town Water Department and Dig Safe at least seven days prior to any work on the water system.

B. Skilled workers experienced in such work shall install all items. Tools shall be adequate for the work and in good condition so as to produce good, clean cut threads of the correct size, pitch, and taper.

C. Installation of all water lines shall be in accordance with the latest version of AWWA C600 or AWWA C605 , as applicable, current edition.

D. Connection to an existing water main shall be done under the supervision of and with the approval of the Town Water Department. It is the applicant's, developer's, or owner of record's responsibility to secure ALL necessary connection permits and pay ALL applicable fees to make the connection, and to coordinate all parties involved in the process. The engineer and the Town Water Department shall be notified at least two working days in advance of the intended connection time. No existing valves, hydrants, curb stops, etc. shall be operated without prior approval of the Town Water Department. The Town Water Department shall operate all valves initially to ensure the integrity of the valve. The Town Water Department may then allow the contractor to operate those valves. Any damage occurring after the use of any valve operated by the contractor shall be the contractor's responsibility.

E. Care shall be taken to prevent damage to valves and other appurtenances during handling and installation. All materials shall be carefully inspected for defects in workmanship and materials; all debris and foreign matter cleaned out of valve openings, etc.; all operating mechanisms operated to check their proper functioning, and all other nuts and bolts checked for tightness. Valves and other equipment, which do not operate easily, or are otherwise defective, shall be replaced. All valves shall be carefully incorporated into the water main and supported in their respective positions free from all distortion and strain. Valves and valve boxes shall be set plumb. Valve boxes, besides being plumb, shall be centered directly over the valves.

F. All pipes showing cracks shall be rejected. If cracks occur in the pipe, the contractor may, at his own expense and after approval of the Town Water Department, cut off cracked portions at a point at least twice the pipe diameter from the visible limits of the crack and use the sound portion of the pipe.

G. All water mains shall have no less than six feet (6') of cover unless waived by the Town Water Department. The pipe shall be laid to conform to the lines and grades indicated on the plans. The Town Water Department may restrict work before November 15 and after April 1 during adverse weather conditions. The Town Water Department may not allow excavating for water mains during the winter months except by special permission for emergencies. Each pipe shall be laid so as to form a close joint with the next adjoining pipe and to bring the inverts continuously to the required grade. In no cases shall the waterline have less than four feet (4') of cover over the top of the pipe.

H. Temporary support, adequate protection, and maintenance of all underground structures, drains, sewers and other obstructions encountered in the progress of the work shall be provided at all times. If utility service is interrupted as a result of work for the project, the contractor shall immediately restore service by repairing the damaged utility at the contractor's expense.

I. At all times, when pipe laying is not actually in progress, the open ends of the pipe shall be closed by temporary watertight plugs or by other approved means. If water is in the trench when work is resumed, the plug shall not be removed until all danger of water entering the pipe has passed. During construction, the contractor shall conduct operations so as to prevent the accumulation of water, ice, and snow in the vicinity of excavations or in the vicinity of excavated areas, and to prevent water from interfering with the progress and quality of the work.

J. Under no conditions shall water be allowed to rise in open trenches after pipe has been laid.

K. Accumulated water, ice, and snow shall be promptly removed and disposed of by pumping or other approved means. Disposal shall be carried out in a manner that will not create a hazard to public health, nor cause injury to public or private property, work completed or in progress, or public streets. Disposal shall not cause any interference in the use of streets and roads by the public. Pipes under construction shall not be used for drainage of excavations.

L. Any deflection of joints in pipe up to twelve–inch (12") diameter shall be within the limits specified by the manufacturer, but not to exceed five degrees or nineteen inches (19") per eighteen feet (18') of pipe length.

M. Concrete thrust blocks shall be installed on all hydrants, plugs, tees, and bends deflecting 11 1/4 degrees or more. Concrete thrust blocks shall be used in conjunction with "Mega–Lug" restraining glands or equivalent. Care shall be taken to ensure that concrete will not come into contact with flanges, joints, or bolts. The required area of thrust blocks shall be indicated on plan typicals and approved by the Town Water Department. Concrete shall be placed against undisturbed soil. Wooden side forms or equal shall be provided for thrust blocks. No backfilling shall be allowed until concrete masonry has set sufficiently. Where directed by the Town Water Department or engineer, concrete encasement of the waterline may be made for stream crossings and similar purposes. Where required on the plans or as directed by the Town Water Department or engineer, a concrete cradle shall be used to bolster and strengthen the pipe. The Town Water Department or his designee shall inspect all thrust blocks prior to backfilling.

N. All trenching safety standards shall be in conformance with all applicable State and Federal guidelines. The contractor shall be solely responsible for any safety citations by State or Federal inspectors.

O. There shall be no physical connection between the distribution system and any pipes, pumps, hydrants, or tanks that are supplied with water that is, or may be, contaminated.

P. As necessary, temporary PVC markers shall be supplied at all gate valves, curb boxes, and at the end of water lines to a minimum of twelve inches (12") above finish grade until accepted by the Town Water Department.

Q. All surplus material and debris shall be removed as the project progresses, leaving all areas clean and presentable.

R. Unless otherwise required, all paving and sidewalks that may be damaged during construction shall be replaced with the same kind of material that previously existed.

S. The contractor shall be responsible for proper protection of persons and property on the project. The contractor shall barricade open holes and depressions occurring as part of the work, and post warning lights on adjacent property to or with public access.

T. Warning lights shall be operated during hours from dusk to dawn and as otherwise requested.

U. The contractor shall protect structures, utilities, sidewalks, pavements, and other facilities from damage caused by settlement, lateral movement, washout, and other hazards created by construction operations.

V. No water lines shall be installed after November 15 or before April 1 without prior approval of the Town Water Department.

3.02 WATER/SEWER SEPARATION

A. Water mains crossing sewers shall be laid to provide minimum vertical distance of eighteen inches (18") between the outside of the water main and the outside of the sewer line. This shall be the case where the water main is either above or below the sewer. At crossings, one full length of pipe shall be located so both joints will be as far from the sewer as possible. This vertical separation shall be maintained for that portion of the water main located within ten feet (10') horizontally of any sewer it crosses. Water mains must be laid at least five feet (5') horizontally from any existing or proposed storm sewer and ten feet (10') from any existing or proposed sanitary sewer.

B. When it is impossible to obtain horizontal and vertical separation shown on details in accordance with Vermont Drinking Water and Groundwater Protection Division Rule, Chapter 21, Appendix A, Section 8.6., coordinate with Engineer or Town Water Department. No water main shall pass through or come in contact with any part of a sewer manhole.

C. Distribution lines shall not be placed closer than fifty feet (50') horizontal distance from any septic tank or leach field unless approved by the Vermont Drinking Water and Groundwater Protection Division Rule Provisions under Chapter 21.8.6.4 or the Town Water Department.

D. Force main crossing shall be arranged so that at least one full length of sewer pipe is centered above or below the water line, with the sewer joints as far as possible from the water joints and encased in concrete. The new force main line shall be constructed to water main standards for a minimum of twenty feet (20') on either side of the crossing. The section constructed to water main standards shall be pressure tested to maintain 50 psi for fifteen (15) minutes without leakage prior to backfilling. In those areas that proper cover cannot be provided, proper insulation shall be installed.

E. Sewer and waterline separation shall conform to all Vermont Drinking Water and Groundwater Protection Division Rule requirements, and installed in accordance with the latest edition of the "Ten States Standards – Recommended Standards for Water."

3.03 TESTING AND DISINFECTION

A. All water mains shall be constructed, tested and disinfected in accordance with AWWA Standards C–600, C–605, C651 and The Vermont Drinking Water and Groundwater Protection Division Rule. All tests shall be conducted by and at the expense of the Contractor.

1. The Contractor shall furnish all gauges, testing plugs, caps and all other necessary equipment and labor to perform leakage and pressure tests in sections of an approved length. Each valved section, including hydrant laterals, or a maximum length of 1,000 feet of pipe shall be tested. The Contractor shall provide at his own expense any additional taps to the water line necessary to perform the pressure and leakage test between valves. All didinfection/testing shall be completed by an independent third party unless otherwise approved by the Engineer or local municipality.

2. All water required for testing shall be potable. All testing shall be conducted in the presence of the Engineer.

3. The Contractor shall make the necessary provisions to tap the pipe at the high point to release all air and shall plug same after completing the test. Hydrants or blowoffs located at high points may be used for air release in lieu of taps if approved by the Engineer.

4. For the pressure test, the Contractor shall develop and maintain for two hours, 150% of the working pressure, or 200 psi, whichever is greater. Failure to hold within 5 psi of the designated pressure for the two hour period constitutes a failure of the section tested.

5. No pipe installation shall be accepted if the leakage is greater than that determined by the following. Maximum allowable leakage will be:

$$L = \frac{SD\sqrt{P}}{148{,}000} \quad \text{or} \quad L = \frac{ND\sqrt{P}}{7{,}400}$$

whichever is less

Where:

L = allowable leakage, in gallons per hour
S = length of pipe tested, in feet
D = nominal diameter of the pipe, in inches
P = average test pressure during the leakage test, in pounds per square inch (gauge).

N = Number of joints in the pipeline tested

All testing shall be conducted in accordance with AWWA C600 (latest edition)

6. Should any section of pipe fail either the pressure or leakage test, the Contractor shall do everything necessary to locate and repair or replace the defective pipe, fittings, or joints at no cost to the Owner.

7. Disinfection: Disinfection of the pipeline shall be directed by the Engineer and at the Contractor's expense. AWWA Standard C–651 shall be used as a basis for the disinfection process.

B. The Engineer or Town Water Department will require as minimum:

1. Complete flushing of the pipeline to wash out all dirt, debris, etc. which may have accumulated in the pipeline during construction. A reducing agent shall be used at the point of flushing to eliminate the free chlorine residual per the direction of the Town Water Department.

2. Following flushing to clean clear water, the Contractor will add chlorine through continuous feed to the entire pipeline volume of water such that the water will have not less than 25 mg/L free chlorine, and let the mixture set for at least 24 hours.

3. After the 24–hour duration, the water in the pipeline shall be tested for residual free chlorine and must contain a minimum of 10 mg/L chlorine. If less than 10 mg/L are found, then the disinfection procedure shall be repeated until at least 10 mg/L chlorine residual is indicated by test.

4. Upon successful completion of step 3 above, the pipeline shall be flushed again until the chlorine concentration in the pipeline is no higher than that prevailing in the supply system. A reducing agent shall be used to eliminate the free chlorine residual in the flushing process per the direction of the Town Water Department.

C. After final flushing and before the new water main is connected to the distribution system, two consecutive sets of acceptable samples, taken at least 24 hours apart, shall be collected from the new main, and submitted to the Vermont Health Department for analysis. At least one set of samples shall be collected from every 1,000 feet of the new water main, plus one set from the end of the line and at least one set from each branch. All samples shall show the absence of coliform organisms and, if required, the presence of a chlorine residual (AWWA C651–99). If the initial disinfection fails to produce samples which pass the V.S.H.D. requirements for potable drinking water, then the new main shall be reflushed and shall be resampled until satisfactory test results are obtained.

D. Upon satisfactory results by the Vermont State Health Department, the pipeline may be placed in service. All costs for water, materials, equipment and labor to perform the required testing disinfection, and flushing of the pipeline shall be paid by the Contractor.

3.04 SUBMITTAL OF TEST RESULTS

A. A. The Applicant or Project Engineer shall be responsible for submittal of test results to the Town Water Department. The Applicant or Project Engineer shall also provide a letter to the Town Water Department certifying that the water system has passed all tests, is constructed in accordance with the approved plans, except as may have been modified by approved Change Order, and is in condition to be placed in service. Submittal of all test results shall be required prior to the water main being placed into service.

3.05 FINAL INSPECTION

A. For one year from the date the new system is placed into service, the applicant's developer/contractor will be responsible for any necessary repairs or corrections as part of the project warranty. At the end of a one–year period, an inspection will be performed by the Town Water Department prior to the system owner assuming ownership of any of the lines and appurtenances. The contractor shall correct any punch list items accumulated during the inspection after receipt of this list. Incomplete work on the system shall not be included in the initial inspection, but shall be inspected as the project continues. The contractor shall repair, replace, or retest promptly as directed by the Town Water Department and without further charges, all work equipment, materials or parts, which may fail during the one year warranty period.

B. A final walk–through inspection shall be conducted by the Town Water Department prior to the water system being accepted for ownership by the system owner. This inspection shall include but not be limited to:

1. Valves, hydrants, and curb stops operating properly.

2. Valve boxes and covers set plumb and at proper elevations.

3. Proper hydrant nozzle height above grade.

4. Proper hydrant opening direction, nozzle thread, and barrel color.

5. Proper distance from the face of the curb of hydrant nozzles.

6. Hydrant flags meeting Town Water Department specifications installed on each fire hydrant at the time of installation.

7. Static and residual hydrant pressures and flow rates.

8. Curb boxes inside ROW, set to grade, containing operating rod, and plumb.

9. Tie information and record drawings complete and submitted.

10. Material testing results, lab reports, manufacturers' certificates, and leakage test results complete and on file.

11. General appearance and restoration.

12. Submittal of O&M manuals in hard copy and Adobe Acrobat Reader (.pdf) format.

13. Submittal of As–Builts in hard copy format and Auto–CAD.DWG Version 2000 format or newer within 14 days of completion.

3.06 GENERAL INFORMATION

A. All persons taking water must keep the fixtures and service pipe within their own premises in good repair and fully protected from frost, and must prevent unnecessary leakage of water. The Town Water Department shall not be liable for leakage of hydrants, pipes or fixtures upon the premises of any consumer, nor for obstructions therein by freezing or otherwise, nor for damages resulting from any of the forgoing causes. All leaks that are on the building side of the curb stop will be the owner's responsibility and repaired at the owner's expense.

B. Water rates shall be collected for all water used until the water is shut off at the curb stop by the Town Water Department. No abatement of water rates will be allowed by reason of disuse, diminished use, or vacancy of premises without proper notice to the Town Water Department.

C. The Town Water Department or system owner shall not be liable for any injury, loss or damage of whatever nature occasioned by the failure to maintain a constant or uniform pressure in the water mains, or for damages occasioned by or growing out of a stoppage of said water by frost or other cause, or for damage occasioned by or growing out of an insufficient supply of the same, or for accident or damage of any kind caused by or growing out of the use or failure of said water.

D. No person shall open any hydrant or draw water there from except the Town Water Department personnel or persons under their direction, or the officers or designees of the municipal fire department and members of the fire companies under their direction for fire purposes, or those individuals who have been granted approval on a hydrant use application by the Town Water Department, in which case, all such usage shall be metered. Fines for unauthorized use of any hydrant or connection may be incurred, according to the Rules and Regulations of the Town Water Department.

E. One curb stop and one water meter shall be installed for each individual dwelling unit, condominium unit, apartment unit, commercial or office occupancy. Exceptions may be permitted in cases where a condominium association signs a binding agreement to be responsible for all collection of water bills. In cases where condominiums are converted into separate apartments, separate curb stops and water meters shall be installed for each unit. Town Water Department employees shall install all water meters. Under no circumstances are plumbers or persons other than those authorized by the Town Water Department permitted to turn water on or off at the curb stop. The water will not in any instance be turned on to any premise for use until the Town Water Department has suitably attached a meter.

F. The owner of the premises shall be responsible for all water payments. A change of tenants or premises will not relieve the owners from payment of a back bill.

LANDSCAPE GRADING

PART 1 – GENERAL

1.01 SUMMARY

B. Section includes:

1. Finish grading; bring rough grade in areas to design elevations as shown on the drawings.

2. Topsoil: Work shall consist of furnishing, placing and shaping topsoil, or placing, spreading, and shaping topsoil form stockpiles or stripped areas.

PART 2 – PRODUCTS

2.01 TOPSOIL

A. Topsoil shall be loose, friable, reasonably free of admixtures of subsoil, free from refuses, stumps, roots, brush, weeds, rocks, and stones 1 1/4 inch in overall dimensions. The topsoil shall also be free from any material that will prevent the formation of a suitable seedbed or prevent seed germination and plant growth. It shall contain not less than three (3) nor more than twenty (20) percent organic matter. Any material which has become mixed with undue amounts of subsoil during any operation at the source or during placing or spreading will be rejected and shall be replaced by the Contractor with acceptable material.

PART 3 – EXECUTION

3.01 SUBGRADE PREPARATION

A. Clean subgrade of all stumps, stones, roots, trash or other materials which might hinder proper tillage or spreading.

B. All surfaces on which topsoil is to be placed shall be graded to a reasonably true surface and scarified by raking, discing or other approved means to a minimum depth of two inches before placing topsoil.

3.02 PLACING TOPSOIL

A. Minimum final depth of topsoil shall be 4 inches.

B. Place topsoil when seeding operations can closely follow spreading operations. Use topsoil in relatively dry state.

C. Topsoil shall be spread and shaped to the lines and grades shown on the plans, or as directed by the Engineer. The depth stated in the contract to which the topsoil is to be placed is that required after final rolling of the material has taken place. All stones, roots and debris over 1¼ inch in diameter along with any sodding weeds and other undesirable material shall be removed.

D. After shaping and grading, all trucks and other equipment shall be excluded from the topsoiled area to prevent excessive compaction. The Contractor shall perform such work as required to provide a friable surface for seed germination and plant growth prior to seeding.

E. It shall be the Contractor's responsibility to restore to the line, grade and surface all eroded areas with approved material and to keep topsoiled areas in acceptable condition until the completion of the work.

SEEDING

PART 1 – GENERAL

1.1 Section Includes:

A. Seeding.

1. Furnish all labor, materials and equipment to complete all seeding work as shown on the drawings and specified herein.

2. Except where otherwise shown or specified, the Contractor shall seed all areas where new contours are shown on the drawings and all areas where existing ground cover has been disturbed by the Contractor's operations.

1.2 SUBMITTALS

A. Product Data: For each type of product indicated.

1.3 PROJECT CONDITIONS

A. Planting Restrictions: Seeding and initial fertilizing shall be done between May 1st and September 15th unless otherwise authorized. Seeding shall not be done during windy weather or when the ground is frozen, excessively wet, or otherwise untillable. If seeding is done during July or August, additional mulch material may be required. Coordinate planting periods with initial maintenance periods to provide required maintenance from date of Substantial Completion.

PART 2 – PRODUCTS

2.1 SEED

A. Conservation Seed Mix:

Kind of Seed	Minimum Purity	Minimum Germination	Lbs/Acre
Creeping Red Fescue	98%	85%	22.5
Tall Fescue	95%	95%	22.5
Red Top	95%	90%	3
Birdsfoot Trefoil	98%	85%	9
Annual Ryegrass	95%	85%	3
		TOTAL =	60

2.2 INORGANIC SOIL AMENDMENTS

A. Lime: ASTM C 602, agricultural limestone containing a minimum of 85 percent calcium carbonate equivalent and as follows:

1. Class: T, with a minimum of 99 percent passing through No. 8 sieve and a minimum of 75 percent passing through No. 60 sieve.

2.3 FERTILIZER

A. Commercial Fertilizer: Commercial–grade complete fertilizer of neutral character, consisting of fast– and slow–release nitrogen, 50 percent derived from natural organic sources of urea formaldehyde, phosphorous, and potassium.

B. Slow–Release Fertilizer: Granular or pelleted fertilizer consisting of 50 percent water–insoluble nitrogen, phosphorus, and potassium.

2.4 MULCHES

A. Mulch: Provide air–dry, clean, mildew– and seed–free, hay or threshed straw of wheat, rye, oats, or barley.

B. Compost Mulch: Well–composted, stable, and weed–free organic matter, pH range of 5.5 to 8; moisture content 35 to 55 percent by weight; 100 percent passing through 1–inch sieve; soluble salt content of 2 to 5 decisiemens/m; not exceeding 0.5 percent inert contaminants and free of substances toxic to plantings; and as follows:

1. Organic Matter Content: 50 to 60 percent of dry weight.

PART 3 – EXECUTION .

3.1 PREPARATION

A. Protect structures, utilities, sidewalks, pavements, and other facilities, trees, shrubs, and plantings from damage caused by planting operations.

1. Protect adjacent and adjoining areas from hydroseeding and hydromulching overspray.

2. Protect grade stakes set by others until directed to remove them.

B. Provide erosion–control measures to prevent erosion or displacement of soils and discharge of soil–bearing water runoff or airborne dust to adjacent properties and walkways.

C. Newly Graded Subgrades: Loosen subgrade to a minimum depth of 4 inches. Remove stones larger than 2 inches in any dimension and sticks, roots, rubbish, and other extraneous matter.

1. Apply fertilizer directly to subgrade before loosening.
   a. Delay mixing fertilizer with planting soil if planting will not proceed within a few days.
   b. Mix lime with dry soil before mixing fertilizer.

D. Finish Grading: Grade planting areas to a smooth, uniform surface plane with loose, uniformly fine texture. Grade to within plus or minus 1 inch of finish elevation. Roll and rake, remove ridges, and fill depressions to meet finish grades. Limit finish grading to areas that can be planted in the immediate future.

E. Moisten prepared areas before planting if soil is dry. Water thoroughly and allow surface to dry before planting. Do not create muddy soil.

F. Before planting, restore areas if eroded or otherwise disturbed after finish grading.

3.2 APPLICATION RATES

A. When a soil test is not available, the following minimum amounts should be applied:

SITE ENGINEER:

CIVIL ENGINEERING ASSOCIATES, INC.
10 MANSFIELD VIEW LANE, SOUTH BURLINGTON, VT 05403
P: 802-864-2323 FAX: 802-864-2271 web: www.cea-vt.com

COPYRIGHT © 2023 – ALL RIGHTS RESERVED

DRAWN: MAB
CHECKED: DSM
APPROVED: DSM

CLIENT:

405 INVESTMENT CORPORATION

135 CHURCH STREET
BURLINGTON, VT 05401

PROJECT:

BURLINGTON CITY ARTS FOUNDATION, INC.

405 PINE STREET
BURLINGTON, VT

DATE	CHECKED	REVISION
09/25/23	DSM	UPDATED SPECIFICATIONS PER CITY COMMENTS

SPECIFICATIONS

DATE: JAN. 2022
SCALE: NTS
PROJ. NO.: 21212
DRAWING NUMBER: C5.3

P:\AutoCADD Projects\2021\21212-Tuxecsullins\1-CADD Files\dwg\21212 - Detail - Spec.dwg 9/25/2023 10:57:56 AM, DWG To PDF.pc3

1. Agricultural limestone: 2 tons/acre.

2. Nitrogen (N): 50 lbs./acre.

3. Phosphate: 100 lbs./acre.

4. Potash: 100 lbs./acre.

   a. This is the equivalent of 500 lbs./acre of 10–20–20 fertilizer or 1,000 lbs./acre of 5–10–10.

5. Hay mulch: 2 tons/acre.

3.3 SEEDING

A. Sow seed with spreader or seeding machine. Do not broadcast or drop seed when wind velocity exceeds 5 mph. Evenly distribute seed by sowing equal quantities in two directions at right angles to each other.

   1. Do not use wet seed or seed that is moldy or otherwise damaged.

   2. Do not seed against existing trees. Limit extent of seed to outside edge of planting saucer.

B. Rake seed lightly into top 1/8 inch of soil, roll lightly, and water with fine spray.

C. Protect seeded areas with slopes exceeding 1:3 with erosion–control blankets installed and stapled according to manufacturer's written instructions.

D. Protect seeded areas from hot, dry weather or drying winds by applying mulch within 24 hours after completing seeding operations. Soak areas, scatter mulch uniformly to a depth of 3/16 inch, and roll surface smooth.

3.4 HYDROSEEDING

A. Hydroseeding: Mix specified seed, fertilizer, and fiber mulch in water, using equipment specifically designed for hydroseed application. Continue mixing until uniformly blended into homogeneous slurry suitable for hydraulic application.

   1. Mix slurry with fiber–mulch manufacturer's recommended tackifier.

   2. Apply slurry uniformly to all areas to be seeded in a one–step process. Apply slurry at a rate so that mulch component is deposited at not less than 1500–lb/acre dry weight, and seed component is deposited at not less than the specified seed–sowing rate.

3.5 MAINTENANCE

A. Maintain and establish seeding by watering, fertilizing, weeding, mowing, trimming, replanting, and other operations. Roll, regrade, and replant bare or eroded areas and remulch to produce a uniformly smooth lawn. Provide materials and installation the same as those used in the original installation.

   1. In areas where mulch has been disturbed by wind or maintenance operations, add new mulch and anchor as required to prevent displacement.

   2. Begin maintenance immediately after each area is planted and continue until acceptable lawn is established, but for not less than the following periods:

      a. Seeded Areas: 90 days from date of Substantial Completion.

      b. When initial maintenance period has not elapsed before end of planting season, or if seeding is not fully established, continue maintenance during next planting season.

3.6 SATISFACTORY CONDITIONS

A. Installations shall meet the following criteria as determined by Engineer/Owner:

   1. Satisfactory Seeded Area: At end of maintenance period, a healthy, uniform, close stand of grass has been established, free of weeds and surface irregularities, with coverage exceeding 90 percent over any 10 sq. ft. and bare spots not exceeding 5 by 5 inches.

B. Use specified materials to reestablish area that do not comply with requirements and continue maintenance until areas are satisfactory.

3.7 CLEANUP AND PROTECTION

A. Promptly remove soil and debris, created by work. Clean wheels of vehicles before leaving site to avoid tracking soil onto roads, walks, or other paved areas.

B. Erect temporary fencing or barricades and warning signs as required to protect newly planted areas from traffic. Maintain fencing and barricades throughout initial maintenance period and remove after lawn is established.

C. Remove nondegradable erosion–control measures after grass establishment period.

SITE ENGINEER:

CIVIL ENGINEERING ASSOCIATES, INC.
10 MANSFIELD VIEW LANE, SOUTH BURLINGTON, VT 05403
P: 802-864-2323 FAX: 802-864-2271 web: www.cea-vt.com

COPYRIGHT © 2023 – ALL RIGHTS RESERVED

DRAWN
MAB
CHECKED
DSM
APPROVED
DSM

CLIENT:

405 INVESTMENT CORPORATION

135 CHURCH STREET
BURLINGTON, VT 05401

PROJECT:

BURLINGTON CITY ARTS FOUNDATION, INC.

405 PINE STREET
BURLINGTON, VT

DATE	CHECKED	REVISION
09/25/23	DSM	UPDATED SPECIFICATIONS PER CITY COMMENTS

SPECIFICATIONS

DATE
JAN. 2022
SCALE
NTS
PROJ. NO.
21212

DRAWING NUMBER
C5.4

P:\AutoCADD Projects\2021\21212-Truescollins\1-CADD Files\dwg\21212 - Detail - Specs.dwg 9/25/2023 10:58:19 AM, DWG To PDF.pc3

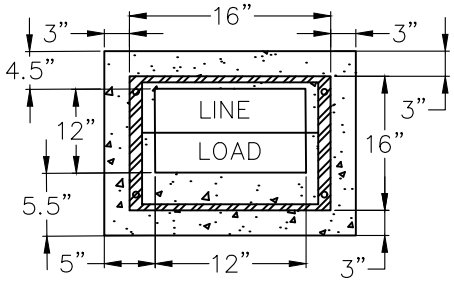

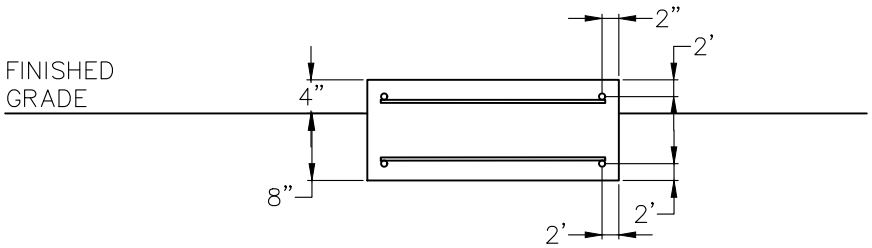

NOTES

1. MOUNTING BASE TO BE INCASED IN CONCRETE SLAB, WITH TOP FLANGE OF BASE FLUSH WITH TOP OF PAD. WHEN CASTING, LEAVE MOUNTING HARDWARE INSTALLED IN MOUNTING BASE.
2. CONCRETE PAD TO EXTEND 8” BELOW GRADE AND A MINIMUM RISE 4” ABOVE GRADE.
3. STONE BASE FOR PAD TO BE 12” OF 3/4” CRUSHED STONE.
4. 36” MINIMUM CLEARANCE REQUIRED FOR FRONT OF METERING PEDESTALS PER NEC 110–16.
5. CABINET TO BE SECURED WITH STANDARD BED PADLOCK.
6. METER BREAKERS ARE LIMITED TO 22kA AIC RATING. SEE TABLE BELOW FOR PROPER CONDUCTOR LENGTH AND SIZE TO MEET AIC RATING.
7. INSTALL BOLLARDS PER BED STANDARD 1628 WHEN INSTALLED IN LOCATIONS NEAR VEHICLE TRAFFIC.
8. METER PEDESTAL SHALL HAVE (2) 8’ GROUND RODS SEPARATED 6’ APART AND CONNECTED WITH A CONTINUOUS RUN OF #4 STRANDED CU PER NEC STANDARDS.
9. CONCRETE PAD SHALL HAVE A 3/4” CHAMFER ON ALL SIDES.
10. CONCRETE PAD TO BE REINFORCED WITH (2) #6 REBAR RINGS AT 2” DEPTH FROM TOP AND BOTTOM OF PAD.

240/120V	MINIMUM CABLE LENGTH OF 1/0 AL (DISTANCE FROM TRANSFORMER TO METER CABINET)		
1Ø kVA	OH XFMR	PADMOUNT XFMR	SUBMERSIBLE XFMR
15	NO MIN	NO MIN	NO MIN
25	NO MIN	NO MIN	NO MIN
37.5	NO MIN	NO MIN	NO MIN
50	NO MIN	NO MIN	NO MIN
75	NO MIN	10’	NO MIN
100	10’	10’	10’
167	20’	20’	20’

BURLINGTON ELECTRIC DEPT.

DISTRIBUTION STANDARDS

1Ø PAD MOUNTED METER PEDESTAL

DATE: 01/03/25	DWG. NO.: 163001
DWN BY: RG	APP. BY:
SCALE: NONE	SHEET 1 OF 1

S.D. Ireland
802-863-6222 • Fax: 802-860-1528
www.sdireland.com
Brothers Corporation

For all contractor submittals, including shop drawings, samples calculation, data or other.

CONTRACTOR'S SUBMITTAL TRANSMITTAL FORM

Date: ~~5/11/20~~ 4/11/23	Transmittal No. 2
To: N+C Attention: Evan	From: JMI Attention:
Project Name: BCA	This is (check one):
Owner: BCA	☑ an original submittal ☐ a 2nd submittal ☐ a _____ submittal
Subject of Submittal	Equipment Designation: Specification Section(s):
site light pole base	detail on C4.0

SHOP DRAWING REVIEW
☐ NO EXCEPTIONS TAKEN
☒ EXCEPTIONS TAKEN AS NOTED
☐ REVISE AND RESUBMIT
☐ NOT ACCEPTABLE
☐ INCOMPLETE SUBMITTAL

Review has only been for conformance with the design concept of the project. Contractor is responsible for dimensions and quantities to be confirmed and correlated at the job site, for information that pertains solely to the fabrication process or to techniques of construction, for coordination of the work of all trades, and for compliance with the contract documents.

CIVIL ENGINEERING ASSOCIATES, INC.
Date 4-21-23 By D. Marshall No. C-3

Complete either (a) or (b), following:

☐ (a) We have verified that the material or equipment contained in this submittal meets all the requirements specified or shown (no exceptions)

☐ (b) We have verified that the material or equipment contained in this submittal meets all the requirements specified or shown, except for the following deviations (List Deviations):

Contractor's Authorized Representative: [signature]

Round Light Pole Base - Template

SD Ireland

Job Name: Burlington City Arts

Customer: BCA

Base #:

Quantity: 5 All 5 are the same

Conduit Size: 1"

Bolt Pattern Ø: Forth coming from electrician

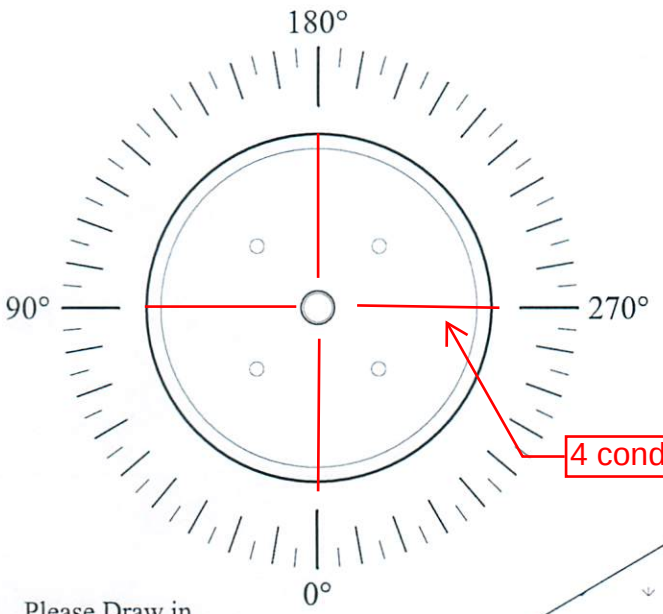

4 conduits on all bases

Please Draw in Conduit layout. (Suggested at 0°, 90°, 180°, 270°)

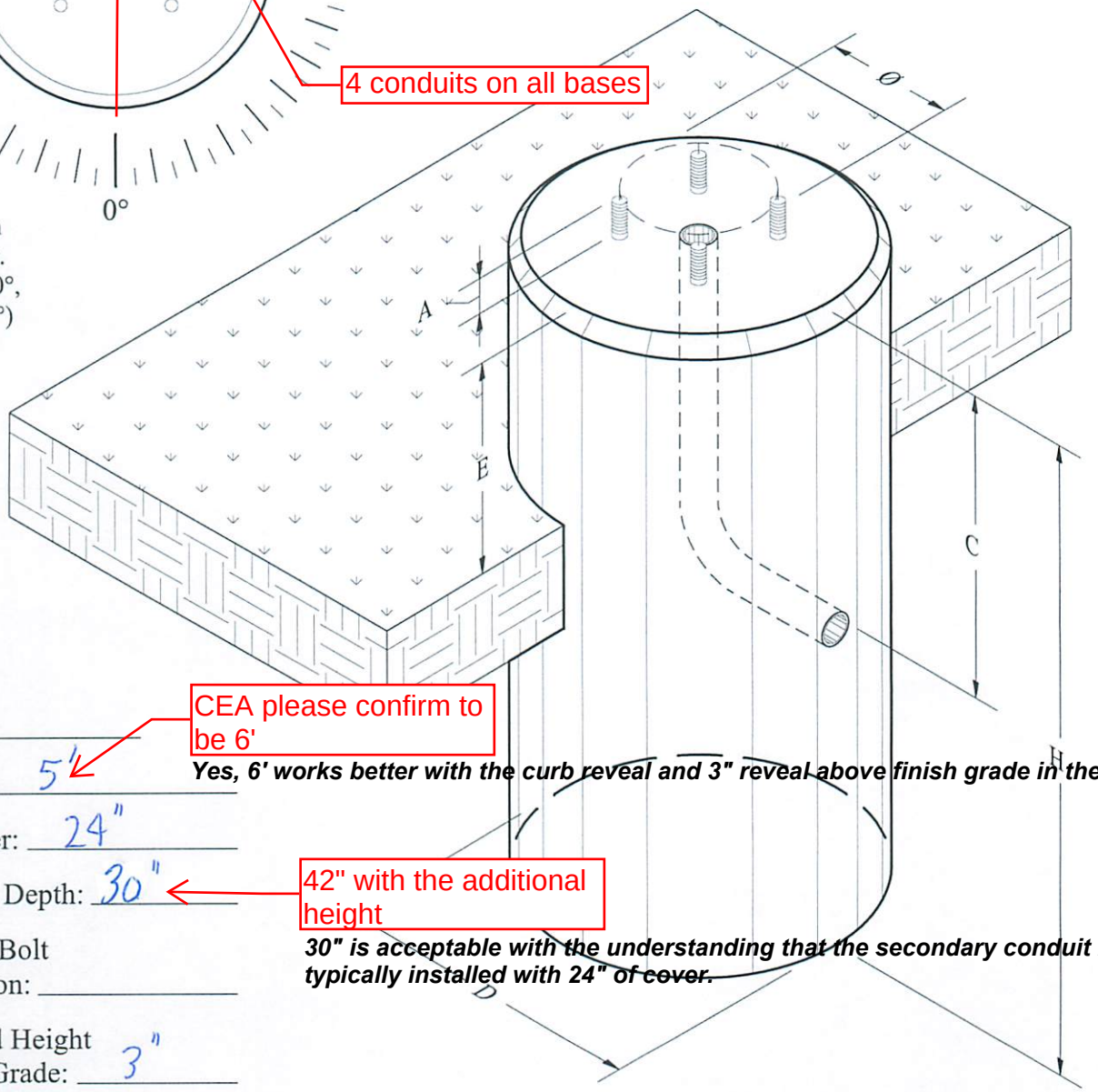

Job #:

(H) Height: 5'

CEA please confirm to be 6'

Yes, 6' works better with the curb reveal and 3" reveal above finish grade in the island.

(D) Diameter: 24"

(C) Conduit Depth: 30"

42" with the additional height

30" is acceptable with the understanding that the secondary conduit is typically installed with 24" of cover.

(A) Anchor Bolt Projection:

(E) Exposed Height Above Grade: 3"

18"Ø=255 lbs/ft : 24"Ø=460 lbs/ft

Design Notes:

- Concrete Minimum 5000 psi at 28 days
- Grade 60 Steel Reinforcing
- Anchor Bolt Projection & Pattern as Required by Project
- Conduit & Anchor Bolts are to be Supplied by Others

Additional Notes:

CD

193 Industrial Ave, Williston, VT 05495 PO Box 2286, South Burlington, VT 05407 Phone: (802) 658-0201 www.SDIreland.com

SD Ireland

Round Light Pole Base - Template

Job Name: Burlington City Arts

Customer: BCA

Base #: LVL 3 charger

Quantity: 1

Conduit Size: 1"

Bolt Pattern Ø: None for future car chargers

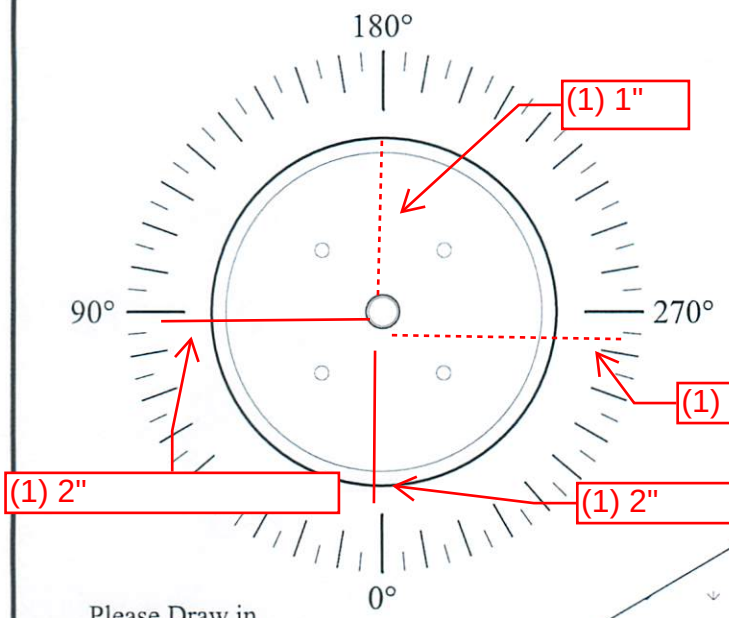

Please Draw in Conduit layout. (Suggested at 0°, 90°, 180°, 270°)

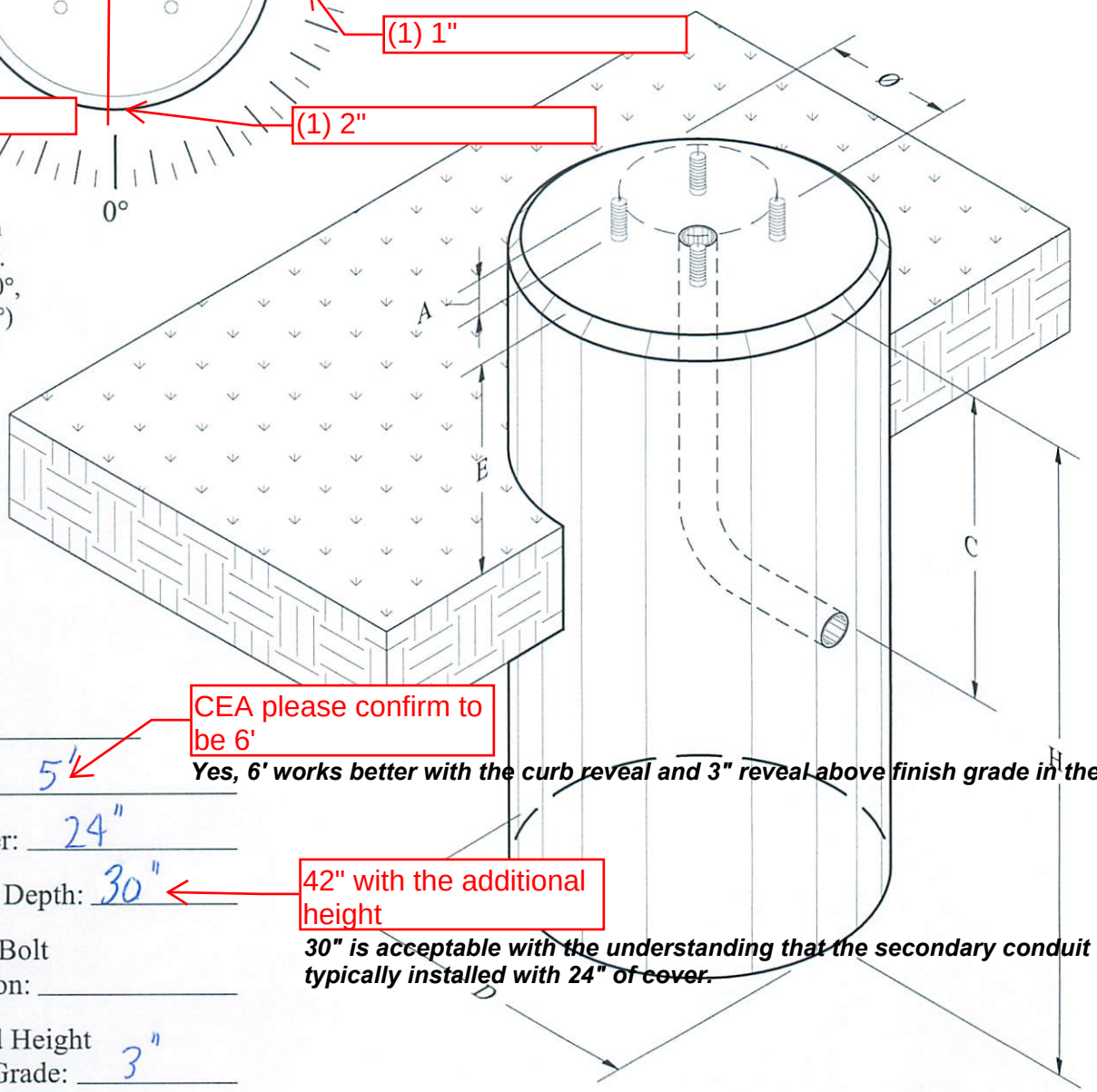

Job #: _____

(H) Height: 5'

CEA please confirm to be 6'

Yes, 6' works better with the curb reveal and 3" reveal above finish grade in the island.

(D) Diameter: 24"

(C) Conduit Depth: 30"

42" with the additional height

30" is acceptable with the understanding that the secondary conduit is typically installed with 24" of cover.

(A) Anchor Bolt Projection: _____

(E) Exposed Height Above Grade: 3"

18"Ø=255 lbs/ft : 24"Ø=460 lbs/ft

Design Notes:

- -Concrete Minimum 5000 psi at 28 days
- -Grade 60 Steel Reinforcing
- -Anchor Bolt Projection & Pattern as Required by Project
- -Conduit & Anchor Bolts are to be Supplied by Others

Additional Notes:

CD

193 Industrial Ave, Williston, VT 05495 PO Box 2286, South Burlington, VT 05407 Phone: (802) 658-0201 www.SDIreland.com

Round Light Pole Base - Template

SD Ireland

Job Name: Burlington City Arts

Customer: BCA

Base #: LVL 2 charger

Quantity: 1

Conduit Size: 1"

Bolt Pattern Ø: None for future car chargers

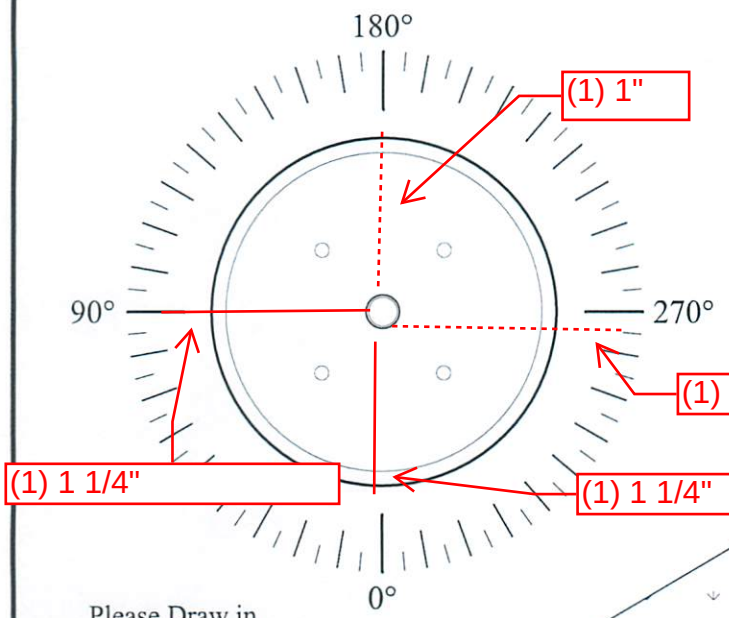

Please Draw in Conduit layout. (Suggested at 0°, 90°, 180°, 270°)

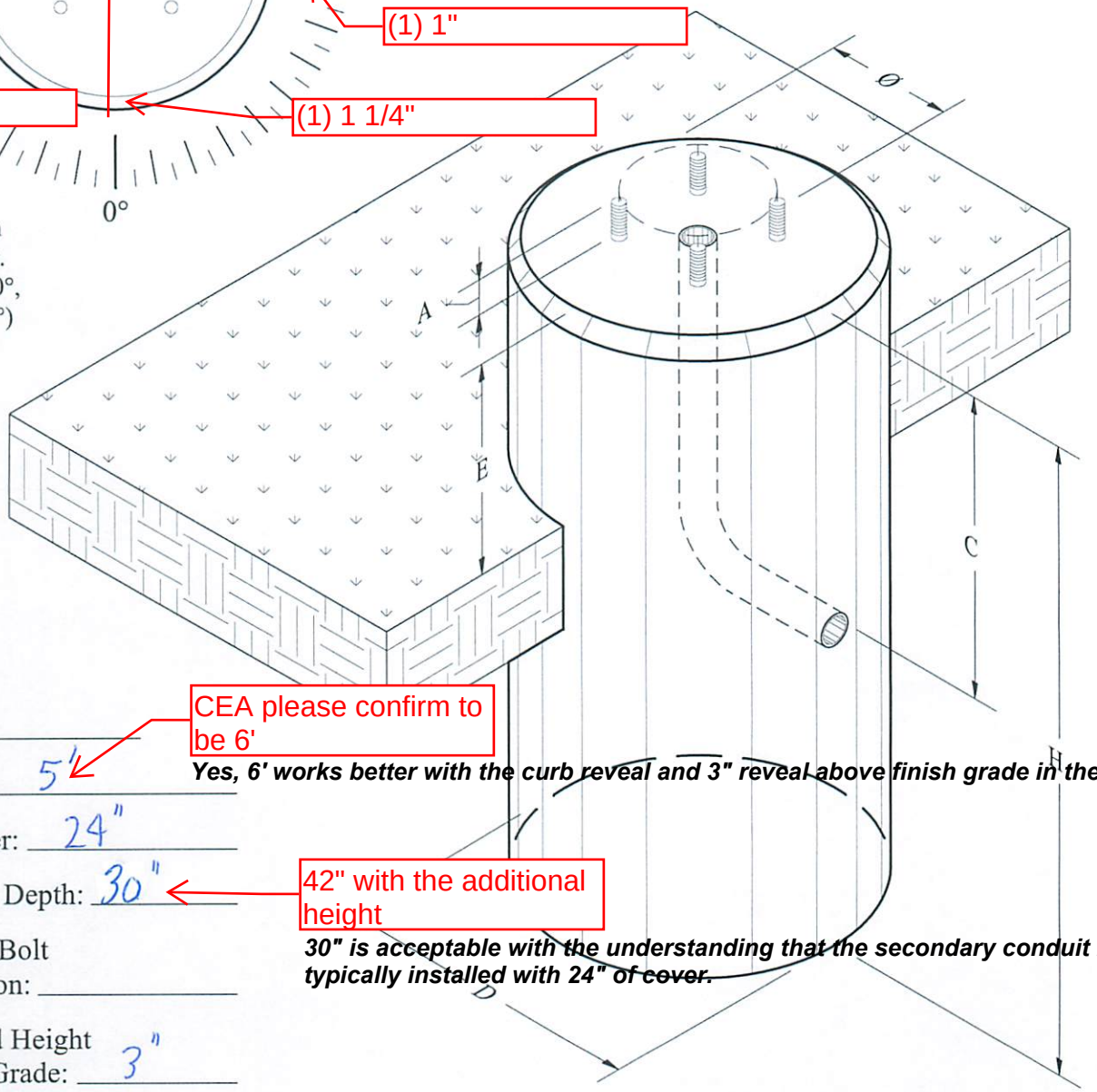

Job #:

(H) Height: 5'

CEA please confirm to be 6'

Yes, 6' works better with the curb reveal and 3" reveal above finish grade in the island.

(D) Diameter: 24"

(C) Conduit Depth: 30"

42" with the additional height

30" is acceptable with the understanding that the secondary conduit is typically installed with 24" of cover.

(A) Anchor Bolt Projection:

(E) Exposed Height Above Grade: 3"

18"Ø=255 lbs/ft : 24"Ø=460 lbs/ft

Design Notes:

- Concrete Minimum 5000 psi at 28 days
- Grade 60 Steel Reinforcing
- Anchor Bolt Projection & Pattern as Required by Project
- Conduit & Anchor Bolts are to be Supplied by Others

Additional Notes:

CD

193 Industrial Ave, Williston, VT 05495 PO Box 2286, South Burlington, VT 05407 Phone: (802) 658-0201 www.SDIreland.com

Appendix C – Groundwater Management Area (VHB)

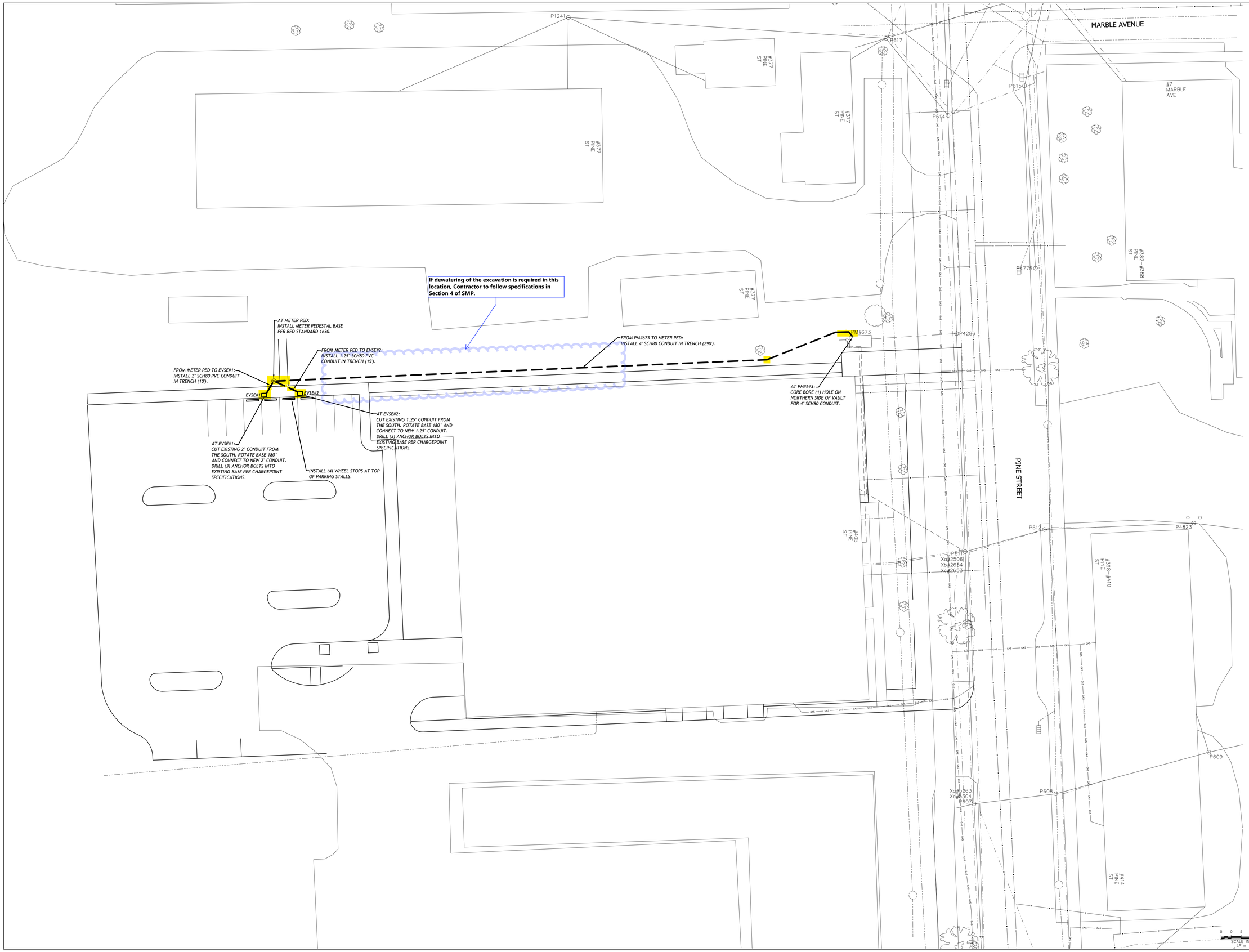

REV #	DRAWN BY:	PLOT DATE:	DESCRIPTION/APPROVAL/DATE

BURLINGTON ELECTRIC DEPARTMENT

BURLINGTON, VERMONT

#405 PINE STREET: LEVEL 2 EVSE CIVIL INSTALLATIONS

SCALE: 1" = 20'	DRN. BY: RG	DWG NO: D15080100
PLOT DATE: 03/11/25	APP. BY: SS	SHEET 1 OF 2

Appendix D – Management of Non-Hazardous Contaminated Soil Request Form (DEC)

VERMONT

AGENCY OF NATURAL RESOURCES

State of Vermont
Department of Environmental Conservation
Waste Management & Prevention Division
1 National Life Drive – Davis 1
Montpelier, VT 05620-3704
(802) 828-1138

MANAGEMENT OF NON-HAZARDOUS CONTAMINATED SOIL REQUEST FORM
July 2021

This form is to be used to assist in the compliance with the Investigation and Remediation of Contaminated Properties Rule (IRule) §35-803. This form takes the place of the ANR Off-site Soil Treatment Form and is to be used for the movement, stockpiling, treatment, or disposal of non-hazardous contaminated soils, both on-site and off-site. This form should be included with Soil Management Plans and Corrective Action Plans, as applicable. DEC Site Manager approval must be received, as signified by signature in Section 4, prior to the initiation of soil management work.

Section 1. General Information

Soil Source Site Name: Burlington City Arts Studios

Address: 405 Pine Street, Burlington, VT

Facility ID#: _____and/or **Spill #**: _____and/or **SMS Site #**: #2019-4876

Will soils be temporarily stockpiled on-site or off-site for more than 90 days or between December 1st and April 1st?
__Yes ___No if Yes, date range: _____ to _____.

Disposal Facility: _____

Quantity of Soils: _____ cubic yards

Soil Contaminants: _____

Check proposed soil management scenario below:

- ☐ Soil will be live loaded and transported to disposal facility. **If yes, skip to Section 4.**
- ☐ Soil to be temporarily stored on/off site, then transported to disposal facility. **If yes, complete entire form**.
- ☐ Soil is Staying On-Site for Treatment. **If yes, complete entire form**.
- ☐ Soil is Destined for Off-Site Stockpile, Management and Treatment. **If yes, complete entire form.**

Section 2. Soil Stockpile Siting Criteria Checklist

☐ There are no potable drinking water supplies within 300-foot radius of the Soil Stockpile. This limit may need to be extended if water supplies are shown to be hydraulically down gradient.

☐ Soil Stockpile is not within zone one or two of a groundwater source protection area.

☐ *There are no sensitive environments within 100 feet of the treatment location including, but not limited to:

- Waterways (e.g., stream, river, lake, pond, wetland or floodplain zone);
- State or Federally listed threatened or endangered species or habitat;
- Class I or II groundwater zone;
- Residence; or
- Property boundary

- ☐ Public access to the soil is prohibited through posting no trespassing or other means approved by Secretary.
- ☐ If the owner of the soil stockpiling parcel is different from the soil generator, written approval from the landowner that also grants access to the Secretary, has been obtained before stockpiling begins.
- ☐ **The municipality in which the soils will be stockpiled or treated has been notified in writing of the soil stockpiling or treatment location. If applicable, local permits should be obtained. M**unicipal approval documents (letter, permit, etc.) attached.**
- ☐ ANR Atlas generated Map including the latitude and longitude of the location in decimal degrees where the soil will be stockpiled. Minimum acceptable accuracy is plus-or-minus 15 feet. **Map attached.**

*If setback criteria from sensitive receptors cannot be achieved, please provide written explanation.
**This is a requirement for off-site stockpiling of soils only.

Section 3. Ownership Information

Location of Soil Stockpile		**Generator/Owner of Soil/Responsible Party**	
Street Address	_____	Street Address	_____
	_____		_____
Company Name	_____	Company Name	_____
Landowner Name	_____	Owner Name	_____
Landowner Phone #	_____	Owner Phone #	_____
Landowner email	_____	Owner email	_____

Section 4. Signature Section

Responsible Party:

As the party responsible for compliance with the Investigation and Remediation of Contaminated Properties Rule and applicable statutes, I hereby certify that the representations made on this form are to the best of my knowledge true and correct.

_____ Burlington Electric Department
Name of Owner/Operator Representative (printed) Company Title

_____ _____
Signature Date

Landowner:

As landowner of the soil treatment stockpile location, I hereby give approval to the soil generator to stockpile the soil volume cited above at the above referenced location. In addition, I hereby grant property access to DEC investigators for the purpose of inspecting the Soil Stockpile at any reasonable time.

_____
Print Name

_____ _____
Signature Date

DEC Site Manager Approval:

Grahame Bradley
_____
Print Name

_____ _____
Signature of DEC Site Manager Date of Approval

Area ID			Section		number	C.Y.	Description
A	1030	LF	20	S.F.		762.96	New sidewalk section
B	18	LF	25	S.F.	5	83.33	Tree islands
C	5	LF	15	S.F.	23	63.89	5'x5' Tree Well & Tree in lawn area
			Depth				
D	2010	SF	1.5	18" DEEP		111.67	New pavement full depth
E	1014.5	SF	0.17	2" DEEP		63.88	New pavement at ex. Gravel
F	412.5	SF	0.75	9" Deep		114.58	Stone dust area
G	481.0	SF	0.75	9" Deep		133.61	Gravel or Pavement to lawn
H	208.0	SF	1.5	18" Deep		115.56	Permeable pavers
I	915.5	SF	0.75	9" Deep		254.31	Exposed soil to Lawn / Planter
J	106.0	SF	0.75	9" Deep		29.44	Rain Garden
K	109.0	SF	0.75	9" Deep		30.28	Stone drip edge
L	30	LF	16	SF	2	35.56	Egress door w/ 5' frost wall
	71.1	LF	21.5	S.F.		56.62	2:1 Excavation for pad
M	142	SF	1.5	18" Deep		7.89	Condencer Pad
N	280	SF	1.17	14" Deep		12.13	Dumpster Pad and subbase (28'x10')
	4	SF	4.5	4'-6" Deep	6	0.67	Dumpster footings (6 total)
					Total area	1876.37	cubic yards

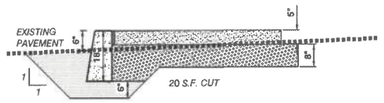

CONCRETE SIDEWALK SECTION 'A'

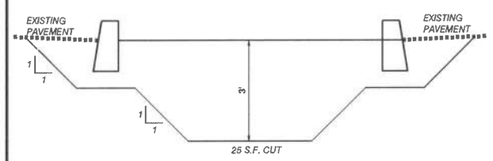

PARKING LOT ISLANDS W/ TREES 'B'

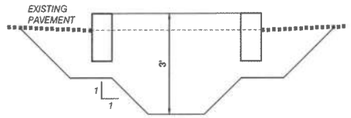

TREE WELLS 'C'

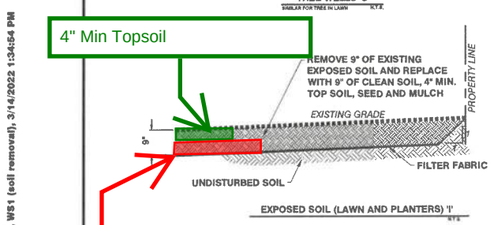

EXPOSED SOIL (LAWN AND PLANTERS) 'I'

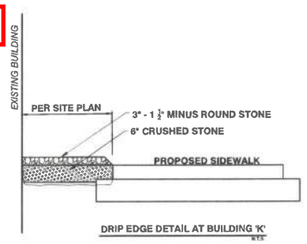

DRIP EDGE DETAIL AT BUILDING 'K'

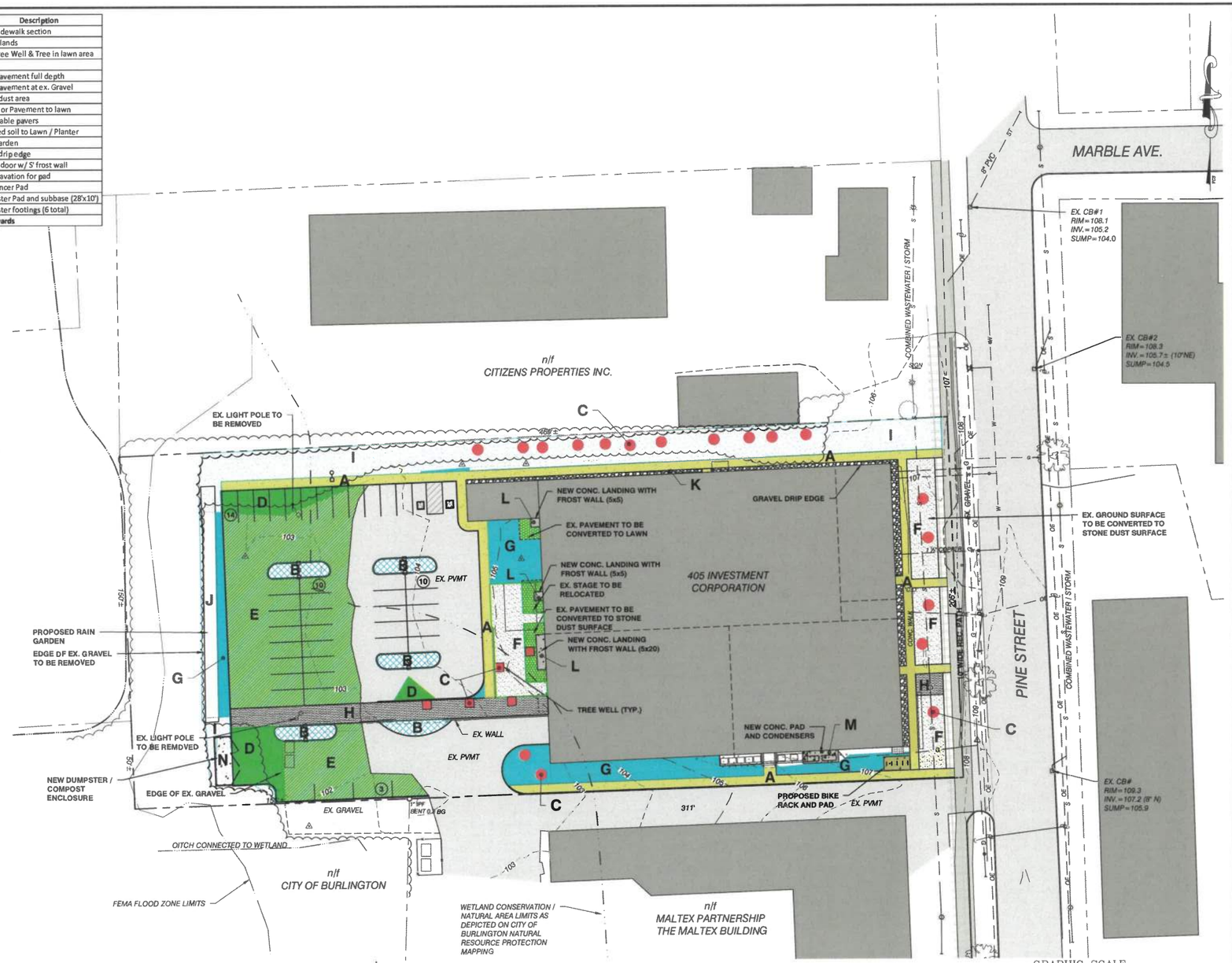

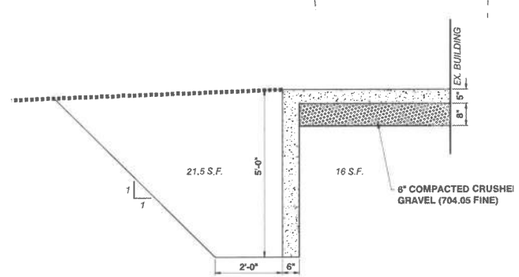

EGRESS DOOR PAD W/ FROST WALL 'L'

SITE ENGINEER:

CIVIL ENGINEERING ASSOCIATES, INC.
10 MANSFIELD VIEW LANE, SOUTH BURLINGTON, VT 05403
P: 802-864-2323 FAX: 802-864-2271 web: www.cea-vt.com

COPYRIGHT © 2021 - ALL RIGHTS RESERVED

DRAWN MAB
CHECKED DSM
APPROVED DSM

CLIENT:

405 INVESTMENT CORPORATION

135 CHURCH STREET
BURLINGTON, VT 05401

PROJECT:

BURLINGTON CITY ARTS FOUNDATION, INC.

405 PINE STREET
BURLINGTON, VT

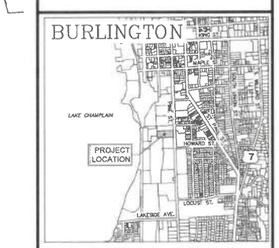

LOCATION MAP
1" = 2000'

DATE	CHECKED	REVISION
01/02/22	DSM	REVISED PER REVIEW COMMENTS
02/04/22	DSM	EGRESS DOORS / REMOVE GARAGE

PROPOSED CONDITIONS PLAN - SOIL REMOVAL

DATE 12/22/2021
SCALE 1" = 30'
PROJ. NO. 21212
DRAWING NUMBER WS1

P:\AutoCADD Projects\2021\21212-Trueexcuilins\1-CADD Files\dwg\21212 - WS1 (soil removal), 3/14/2022 1:34:54 PM

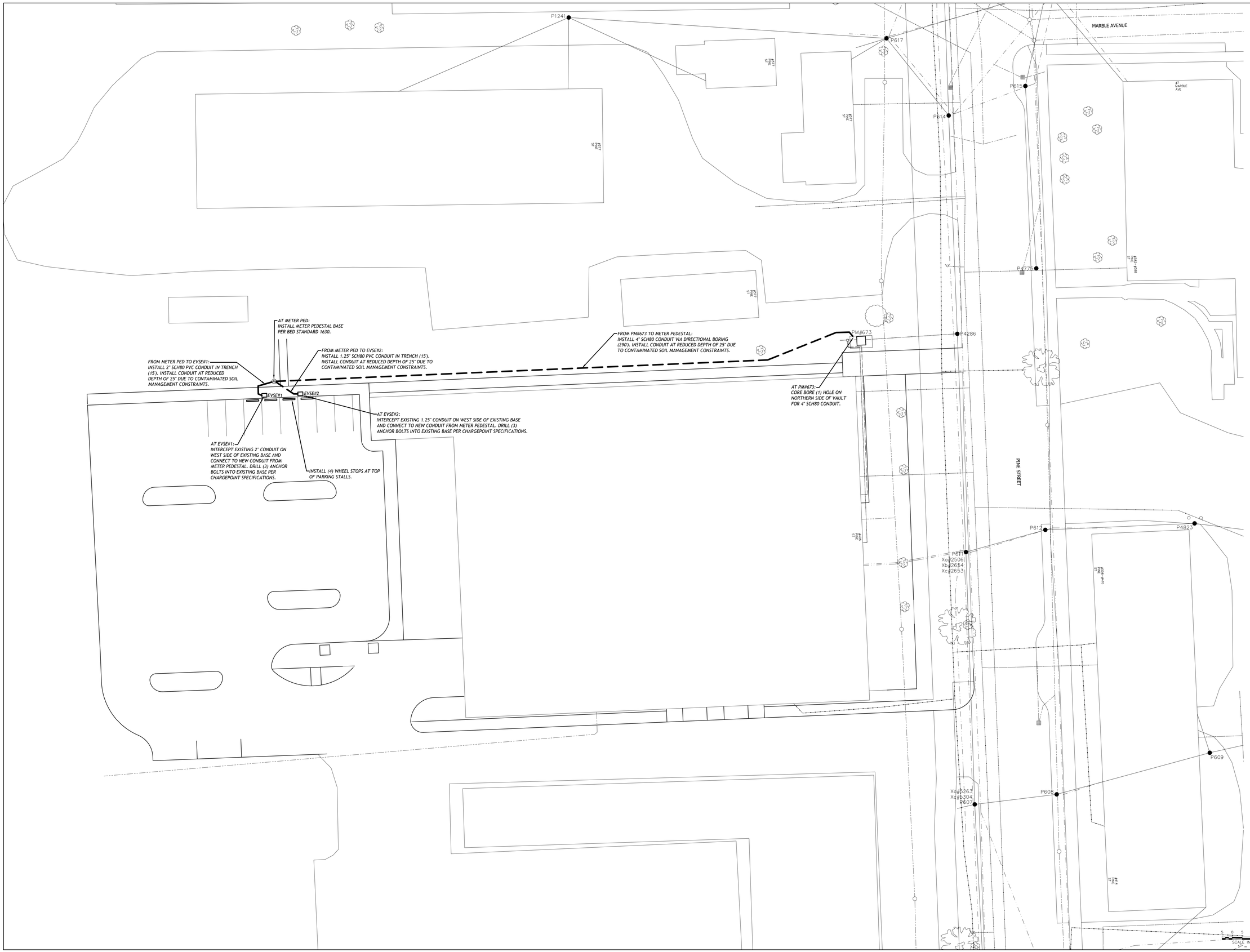

REV #	DRAWN BY:	PLOT DATE:	DESCRIPTION/APPROVAL/DATE

BURLINGTON ELECTRIC DEPARTMENT

BURLINGTON, VERMONT

#405 PINE STREET: LEVEL 2 EVSE CIVIL INSTALLATIONS

SCALE: 1" = 20'	ENG: SS	DWG NO: D15080100
UPDATED: 04/24/26	WO#: 40327	SHEET 1 OF 2

ATTACHMENT E

Burlington Outsourcing Ordinance

Certification of Compliance with the City of Burlington's Outsourcing Ordinance

I,_____, on behalf of_____(Contractor) and in connection with_____(City contract/project/grant), hereby certify under oath that (1) Contractor shall comply with the City of Burlington's Outsourcing Ordinance (Ordinance §§ 21-90 – 21-93); (2) as a condition of entering into this contract or grant, Contractor confirms that the services provided under the above-referenced contract will be performed in the United States or Canada.

Dated at_____, Vermont this_____day of_____, 20 .

By:_____
Duly Authorized Agent

Subscribed and sworn to before me: _____
Notary

— A copy of the ordinance follows this Certification —

ATTACHMENT E – CONTINUED

NOTE: This ordinance only applies for contracts over $50,000.

BURLINGTON'S OUTSOURCING ORDINANCE

ARTICLE VII. OUTSOURCING

21-90 Policy.
It is the policy of the City of Burlington to let service contracts to contractors, subcontractors and vendors who perform work in the United States.

(Ord. of 11-21-05/12-21-05)

21-91 Definitions.

(a) *Contractor* or *vendor.* A person or entity that has a contract with the City of Burlington primarily for the furnishing of services (as opposed to the purchasing of goods), including any subcontractors of such contractor or vendor.

(b) *Government funded project.* Any contract for services which involves any city funds and the total amount of the contract is fifty thousand dollars ($50,000.00) or more. Burlington School Department contracts shall not be considered government funded projects under this article.

(c) *Outsourcing.* The assigning or reassigning, directly, or indirectly through subcontracting, of services under a government funded project to workers performing the work outside of the United States.

(Ord. of 11-21-05/12-21-05)

21-92 Implementation.

(a) No contract for a government funded project shall be let to any contractor, subcontractor, or vendor who is outsourcing, or causing the work to be performed outside of the United States or Canada.

(b) Prior to the commencement of work on a government funded project a contractor, subcontractor or vendor shall provide written certification that the services provided under the contract will be performed in the United States or Canada.

(Ord. of 11-21-05/12-21-05)

21-93 Exemption.
An exemption from requirements of this article may be authorized by the chief administrative officer based upon a determination that the services to be performed for the government funded project are not available in the United States or Canada at a reasonable cost. Any such exemption decision by the chief administrative officer shall be reported to the board of finance in writing within five (5) days. The board of finance may, if it should vote to do so, override the exemption decision if such vote occurs within fourteen (14) days of the date of the chief administrative officer's communication to such board.

(Ord. of 11-21-05/12-21-05)

21-94 Enforcement.

(a) Any contractor, subcontractor or vendor who files false or materially misleading information in connection with an application, certification or request for information pursuant to the provisions of this article or outsources work on a government funded project shall be deemed to be in violation of this article.

(b) A violation of this article shall be a civil offense subject to a civil penalty of from one hundred dollars ($100.00) to five hundred ($500.00). All law enforcement officers and any other duly authorized municipal officials are authorized to issue a municipal complaint for a violation of this article. Each day any violation of any provision of this article shall continue shall constitute a separate violation.

(c) The City of Burlington shall have the right to modify, terminate and or seek specific performance of any contract for a government funded project if the contractor, subcontractor or vendor has not complied with this article.

(Ord. of 11-21-05/12-21-05)

21-95—21-99 Reserved.

ATTACHMENT F

Burlington Union Deterrence Ordinance

Certification of Compliance with the City of Burlington's
Union Deterrence Ordinance

I,_____, on behalf of_____(Contractor) and in connection with_____(City contract/project/grant), hereby certify under oath that_____(Contractor) has not advised the conduct of any illegal activity, it does not currently, nor will it over the life of the contract provide union deterrence services in violation of the City's union deterrence ordinance.
Dated at_____, Vermont this____day of_____, 2018.

By:_____
Duly Authorized Agent

Subscribed and sworn to before me: _____
Notary

— A copy of the ordinance follows this Certification —

ATTACHMENT F – CONTINUED

BURLINGTON'S UNION DETERRENCE ORDINANCE

ARTICLE VIII. UNION DETERRENCE

21-100 Policy.

It is the policy of the City of Burlington to limit letting contracts to organizations that provide union deterrence services to other companies.
(Ord. of 3-27-06/4-26-06)

21-101 Definitions.

(a) *Contractor or vendor.* A person or entity that has a contract with the City of Burlington primarily for the furnishing of services (as opposed to the purchasing of goods), including any subcontractors of such contractor or vendor.

(b) *Government funded project.* Any contract for services which involves any City funds and the total amount of the contract is fifteen thousand dollars ($15,000.00) or more. Burlington School Department contracts shall not be considered government funded projects under this article.

(c) *Union deterrence services.* Services provided by a contractor, subcontractor or vendor that are not restricted to advice concerning what activities by an employer are prohibited and permitted by applicable laws and regulations, but extend beyond such legal advice to encouraging an employer to do any of the following:

1) Hold captive audience, (i.e., mandatory) meetings with employees encouraging employees to vote against the union;

2) Have supervisors force workers to meet individually with them to discuss the union;

3) Imply to employees, whether through written or oral communication, that their employer may have to shut down or lay people off if the union wins the election;

4) Discipline or fire workers for union activity;

5) Train managers on how to dissuade employees from supporting the union.

(d) *Substantial portion of income.* For the purposes of this article, substantial portion of income shall mean greater than ten (10) percent of annual gross revenues or one hundred thousand dollars ($100,000.00), whichever is less.

(Ord. of 3-27-06/4-26-06)

21-102 Implementation.

(a) No contract for a government funded project shall be let to any contractor, subcontractor, or vendor who

1) Advises or has advised an employer to conduct any illegal activity in its dealings with a union.

2) Advertises union deterrence services as specialty services;

3) Earns a substantial portion of its income by providing union deterrence services to other companies in order to defeat union organizing efforts.

(b) Prior to the commencement of work on a government funded project a contractor, subcontractor or vendor shall provide written certification that it has not advised the conduct of any illegal activity, it does not currently, nor will it over the life of the contract provide union deterrence services in violation of this article.

(Ord. of 3-27-06/4-26-06)

21-103 Enforcement.

(a) Any contractor, subcontractor or vendor who files false or materially misleading information in connection with an application, certification or request for information pursuant to the provisions of this article or provided union deterrence services during the life of a contract for a government funded project shall be deemed to be in violation of this article.

(b) The City of Burlington shall have the right to modify, terminate and or seek specific performance of any contract for a government funded project if the contractor, subcontractor or vendor has not complied with this article.

(Ord. of 3-27-06/4-26-06)

21-104—21-110 Reserved.

Certification of Agreement to Comply with the City of Burlington's Livable Wage Ordinance

I, _____, on behalf of _____ ("the Contractor"), in connection with a contract for _____

services to be provided to the City of Burlington ("the City"), hereby certify, under oath, that the Contractor (and any of its subcontractors or subgrantees under this contract) shall comply with the City's Livable Wage Ordinance ("LWO"), B.C.O. 21-80 et seq., and that:

(1) The Contractor shall pay all "covered employees" as defined by the LWO (including covered employees of subcontractors or subgrantees) a livable wage (as determined, or adjusted, annually by the City's chief administrative officer), and shall provide required paid time off for the term of the contract *(or the duration of the contracted project)*;
   - (a) Employees are entitled to 12 days of paid time off per year, which may be prorated subject to B.C.O. Sec. 21-82(c); and
   - (b) For a covered employer that provides employer assisted health care, the livable wage shall be at least $19.90 per hour; and
   - (d) For a covered employer that does not provide employer assisted health care, the livable wage shall be at least $22.11 per hour.

(2) The Contractor shall post a notice regarding the applicability of the LWO in the workplace or in other locations where covered employees normally work, and where such notice can be readily seen;

(3) Upon request of the City's chief administrative officer, the Contractor, for itself and, as applicable, for any of its subcontractors or subgrantees, shall provide payroll records, health insurance enrollment records, and other relevant documentation, as deemed necessary by the chief administrative officer, within ten (10) business days from receipt of the City's request;

(4) The Contractor shall cooperate in any investigation conducted pursuant to the LWO by the City's designated accountability monitors or the City's Office of City Attorney & Corporate Counsel;

(5) The Contractor shall not retaliate, nor allow any of its subcontractors or subgrantees to retaliate, against an employee or other person because such employee or person has exercised rights or is planning to exercise rights protected under the LWO, or has cooperated in an investigation conducted pursuant to the LWO;

(6) The Contractor is required to insert in all subcontracts the requirements of the LWO. The Contractor is liable for violations of the LWO committed by its covered subcontractors.

By signing below, I certify under the pains and penalties of perjury that I have personal knowledge of the foregoing or have made a reasonable inquiry thereinto, and that to the best of my knowledge and belief, the foregoing is true and correct. (See 13 V.S.A. 2904(b).)

Date: _____ By: _____

Contractor, or its duly authorized agent

IMPORTANT NOTE: Effective January 1, 2025, for covered employees not under a labor agreement and not working under an agreement subject to Davis-Bacon Act compliance for highway or heavy construction, if the contract or grant amount, inclusive of amendments, is $50,000 or greater, the vendor is required to certify payroll with each invoice. An acceptable form of certification is attached. Backup documentation may be requested in connection with random compliance audits. Certification of subcontractor or subconsultant payroll is required only upon request.

City of Burlington, Vermont
Certified Payroll Record
Living Wage Ordinance, B.C.O. § 21-84(a)

B.C.O. Ch. 21, Art. VI

Instructions to Covered Employers: Use this form to report wages and benefits for covered employees, as defined in B.C.O. § 21-81(d). If three or fewer covered employees performed services pursuant to your agreement with the City of Burlington during the Reporting Period, then report information for each covered employee. If more than three covered employees performed services pursuant to your agreement with the City of Burlington during the Reporting Period, then report information for the three lowest paid covered employees only.

Reporting Period: from _____ (date) to _____ (date).

(**Note**: The Reporting Period should match the period covered by the invoice accompanying this Record.)

Employee No. 1

Initials, Last Four Digits of SSN, or other Unique Identifier: _____

Total Wages, Salary, and Tips Paid by Covered Employer During Reporting Period: _____

Total Number of Hours Worked for Covered Employer During Reporting Period: _____

Was the Covered Employee Provided Employer-provided Health Insurance as Specified in B.C.O. § 21-81(g)? Yes: _____ No: _____

Did the Covered Employer Offer Paid Time Off Pursuant to B.C.O. § 21-82(c)? Yes: _____ No: _____

Employee No. 2

Initials, Last Four Digits of SSN, or other Unique Identifier: _____

Total Wages, Salary, and Tips Paid by Covered Employer During Reporting Period: _____

Total Number of Hours Worked for Covered Employer During Reporting Period: _____

Was the Covered Employee Provided Employer-provided Health Insurance as Specified in B.C.O. § 21-81(g)? Yes: _____ No: _____

Did the Covered Employer Offer Paid Time Off Pursuant to B.C.O. § 21-82(c)? Yes: _____ No: _____

Employee No. 3

Initials, Last Four Digits of SSN, or other Unique Identifier: _____

Total Wages, Salary, and Tips Paid by Covered Employer During Reporting Period: _____

Total Number of Hours Worked for Covered Employer During Reporting Period: _____

Was the Covered Employee Provided Employer-provided Health Insurance as Specified in B.C.O. § 21-81(g)? Yes: _____ No: _____

Did the Covered Employer Offer Paid Time Off Pursuant to B.C.O. § 21-82(c)? Yes: _____ No: _____

I certify under the pains and penalties of perjury that I have personal knowledge of matters asserted herein or that I am readily familiar with, and have reviewed, the books and records of the covered employer, and that to the best of my knowledge and belief the foregoing is true and correct. I understand that the covered employer may be asked to provide reasonable backup documentation, which shall be provided upon request.

Authorized Representative: _____ Date: _____

Rights & Responsibilities

Under Burlington's Livable Wage Ordinance

$19.90/hr

WHEN
employer ***provides*** employer assisted health insurance

$22.11/hr

WHEN
employer ***does not provide*** employer assisted health insurance

and 12 days of paid time off per year*

*Subject to proration per B.C.O. Sec. 21-82(c)

The law requires employers to display this poster where employees can readily see it.

COVERAGE

Any employer who receives City contracts or grants totaling in excess of $15,000 for any 12-month period is covered. Covered employees are entitled to livable wages, 12 days paid time off per year* for vacation, sick leave, or personal leave, and all rights under the Fair Labor Standards Act (FLSA), as well as other applicable state and federal laws.

Covered contractors are required to include in all subcontracts notice of the Livable Wage Ordinance (LWO), and are liable for LWO violations committed by their covered subcontractors.

ENFORCEMENT

The City is responsible for the administration of the LWO, and has the authority to recover back wages in instances of violations. Employers found in violation of the LWO may be assessed monetary penalties and be barred from future City contracts and grants. The law prohibits retaliation against workers who file a complaint or participate in any proceeding under the LWO.

ADDITIONAL INFORMATION

To obtain additional information about your rights and responsibilities under the LWO, visit the **LWO Webpage (https://www.burlingtonvt.gov/212/Livable-Wage-Ordinance)** or call **802-865-7000, option 1 (Office of the Clerk/Treasurer)**.

Livable Wage July 1, 2025 - June 30, 2026

Effective July 1, 2025

TERMS and CONDITIONS

1. These Terms and Conditions, together with the purchase order and/or contract issued by the Burlington Electric Department's (B.E.D.) Purchasing Office, constitute the entire agreement between B.E.D. and the supplier/contractor. Any modification to said agreement shall be submitted in writing by the party seeking said modification, to the other party. Said modification shall be agreed upon in writing by both parties in order for it to be enforceable. Absent said written modification, this form and said purchase order shall exclusively control the terms of the agreement between the parties.

2. Except as herein provided, no purchases ordered by unauthorized individuals shall be enforceable against B.E.D. Only individuals expressly designated as those vested with the authority to purchase on behalf of B.E.D. shall be considered persons possessing binding purchasing authority. Agreements entered into with unauthorized individuals shall be void and B.E.D. shall not be liable for any such unauthorized agreements.

3. Sellers, suppliers and contractors shall not assign, delegate, transfer, convey, sublet, or otherwise dispose of their rights, titles, interests or obligations under this contract, or their power to execute such contract to any other person, firm or corporation, without the previous written consent of B.E.D.'s Purchasing Office.

4. The parties to this agreement hereby agree that this contract is subject to the laws of the State of Vermont. The parties to this agreement further agree that Vermont's version of the Uniform Commercial Code, found in Title 9A of Vermont Statutes Annotated, shall apply.

5. B.E.D. may return any materials which are defective, unsatisfactory, or of inferior quality or workmanship, or fail to meet specifications or other requirements of this order.

6. B.E.D. reserves the right to cancel this order if goods are not shipped as directed. B.E.D. reserves the right to terminate its obligations under this order or any part hereof if any delivery/awarded service is not made in the time provided or, if no time is specified, within a reasonable time or if the material that is delivered/service provided is not as specified.

7. Seller shall ship in accordance with any instructions from B.E.D. and the requirements of common carriers to secure the lowest transportation costs. No shipments are to be made C.O.D., nor shall any such shipments be accepted. When goods or materials are shipped F.O.B. point of shipment, all freight charges are to be PREPAID by the Seller and added to the invoice total. An original copy of paid express or freight bill shall be attached to the invoice.

8. Seller shall furnish a packing slip with all shipments showing the purchase order number, seller name, catalog numbers, quantities (including back orders) and a full description of materials shipped.

9. Contractor shall furnish current Certificate of Insurance as outlined by B.E.D.'s Insurance Requirement Contractor's Order, a copy of which will be provided by B.E.D.'s Purchasing Office to the Seller. Such evidence of insurance shall be received at B.E.D. before the commencement of work, or Purchase Order and/or Contract is awarded, whichever is sooner, and such insurance shall be maintained throughout the duration of awarded contract. Seller shall be liable for any and/or all damages/claims (including but not limited to bodily/personal injury, property damage, loss of income, business interruption, or wrongful death), while performing or as a result of work assigned/related to the awarded contract.

10. The contractor shall be responsible for ensuring that all utilities are properly located, marked and identified through utilization of, and compliance with, the requirements of the "Dig Safe" program (30 V.S.A. §7001 et seq. and Vermont P.S.B. Rule 3.800). Contractor is responsible for working around existing utilities and agrees to indemnify and hold B.E.D. harmless for any damages to such utilities except for such damages whose sole proximate cause is due to negligence by B.E.D.

11. Seller shall follow all B.E.D. Safety Rules, a copy of which shall be provided, as well as follow good utility practices on details not covered in specification documents with preference given to B.E.D. Standard practices if suitable. Seller is responsible for following all applicable EPA/VOSHA/OSHA/NESC and NEC rules and regulations.

12. When the contract is awarded to provide services, the cost of service shall be a fixed fee or a time and material basis with a Not To Exceed amount. Expenses shall be billed at cost unless otherwise specified on the awarded contract. Seller shall furnish an invoice detailing Purchase Order number, scope of work, mileage and other expenses. If the contract is awarded on a time and material basis, the invoice shall also include dates worked, name of personnel, number of labor hours worked (traveled if chargeable), rate per hour and total labor, equipment rental hours and rates and materials. Seller shall be responsible to obtain all necessary permits and copies shall be furnished with each invoice. Seller shall also furnish documentation of all reimbursable expenses with each invoice.

13. Unless otherwise specified, payments shall be made on partial deliveries accepted by B.E.D. when the amount due on such deliveries so warrants. Progressive billing for services rendered shall be accepted unless fixed fee is quoted. Where there is a question of non-performance involved, payment in whole or part against which to charge back any adjustment required, shall be withheld. In the event cash discount is involved, the withholding of payment as provided herein shall not deprive B.E.D. from taking such discount.

14. In accordance with city regulations, invoices for completed purchase orders must be received by B.E.D.'s Accounts Payable by the 27th of each month to assure payment by approximately the 15th of the following month. Invoices received after that date shall be carried forward to the following month.

15. **All invoices shall be mailed to the ATTENTION of B.E.D.'s Accounts Payable**. Inquiries regarding the status of unpaid invoices shall likewise be directed to B.E.D.'s Accounts Payable.

Rev. 9/9/2010